State of the art, costs, challenges, and government actions to accelerate deployment in the Netherlands

Study on import terminals for hydrogen carriers

TNO Public ⟩ TNO-2026-16759

1 June 2026

Energy & Materials Transition
www.tno.nl
+31 88 866 22 00
info@tno.nl

TNO-2026-16759 – 1 June 2026

Study on import terminals for hydrogen carriers

State of the art, costs, challenges, and government actions to accelerate deployment in the Netherlands

Auteurs	Julio Cesar Garcia-Navarro

Rubricering rapport	TNO Public
Titel	TNO Public
Rapporttekst	TNO Public
Aantal pagina's	66 (excl. voor- en achterblad)
Aantal bijlagen	0

Alle rechten voorbehouden
Niets uit deze uitgave mag worden verveelvoudigd en/of openbaar gemaakt door middel van druk, fotokopie, microfilm of op welke andere wijze dan ook zonder voorafgaande schriftelijke toestemming van TNO.

© 2026 TNO

Executive Summary

It is expected that the transition toward a decarbonized industry in the Netherlands will rely increasingly on the import of low-carbon hydrogen carriers in the future. Despite such envisioned role, no Final Investment Decisions (FIDs) have currently been reached for commercial import facilities. This report evaluates the technical, financial, and policy landscapes for hydrogen carrier import terminals, including conversion to hydrogen gas, focusing on liquid hydrogen (LH_2), ammonia (NH_3), and Liquid Organic Hydrogen Carriers (LOHC).

Levelized Cost of Hydrogen (LCOH): Imported vs. Domestic

- **Imported Costs**: The overall theoretical Levelized Cost of Hydrogen (LCOH) for imported carriers in is estimated at **€ 4-11/kg H_2 for LH_2, € 3-9/kg H2 for NH_3, and € 5-11/kg H_2 for LOHC**. This was obtained based on a literature survey including cost estimates both at present-day prices and 2030 extrapolations.
- **Cost Breakdown**: Approximately half of this LCOH is driven by hydrogen production costs abroad, which are highly variable depending on the country of origin and supply chain assumptions. The **import terminal costs** themselves only account for **10% to 20% of the total** imported LCOH.
- **Comparison to Domestic Production**: **Domestic hydrogen production** in the Netherlands is estimated at approximately **€ 9-16/kg H_2**. While domestic costs appear higher, these figures are derived from market surveys of mature or near-realization projects, making them more realistic than the highly optimistic assumptions often found in international supply chain literature.

Import Terminal CAPEX Comparison

For a theoretical reference import terminal (**6.000-ton H2 storage capacity and 200.000-ton H_2/year reconversion capacity**), capital expenditures vary significantly based on the chosen carrier:

- **LH_2 import terminal**: **€ 160-570 million** (of which 50-99% is storage and 1-48% is reconversion)
- **NH_3 import terminal**: **€ 298-680 million** (of which 8-15% is storage and 85-92% is reconversion)
- **LOHC import terminal**: **€ 370-800 million** (of which 26-30% is storage and 70-74% is reconversion)

These wide variances reflect differences in source data, future cost-down projections, and the varying commercial maturity of equipment such as large-scale LH_2 storage versus chemical reconversion for NH_3 and LOHC.

Disclaimer

The cost analysis has been done based on a wide survey of publicly available literature and no LCOH calculations were carried out explicitly for this study. Companies developing import terminals in the Netherlands have been consulted on the findings but little quantitative feedback was received regarding the LCOH data presented here. Note that this study does

not aim to identify a winner in terms of best carrier to import but to provide insights in the LCOH and to identify where in the import chain government intervention is needed to help accelerate the development. Where deviations occur between theoretical numbers and those provided by the companies, they can be explained by differences in assumptions, country of origin of the imported hydrogen, costs of exporting and shipping, as well as terminal design, technology maturity, and the specific operational choices required for commercial-scale deployment. Some companies also stated that these costs don't include expected inflation given the geopolitical tensions and conflicts at this moment in the world.

Expected Revenue Models

Benchmarking against the mature Liquefied Natural Gas (LNG) import sector, hydrogen carrier import terminals are expected to operate under specific regulatory constraints:

- **Primary Revenue Model (Tolling)**: Because hydrogen import infrastructure is classified as critical as per EU regulations, hydrogen carrier import terminals will be required to **offer Third Party Access (TPA)** to the market. Consequently, the **tolling model** (where the terminal charges negotiated fees for its services without owning the molecule) is expected to be **the predominant revenue framework**. The regulatory framework allows exemptions to third party access in specific cases.
- **Secondary Revenue Streams**: Operators may capture additional value by providing **grid balancing services to hydrogen networks** or by **valorizing residual energy**, such as cold energy from LH_2 and NH_3, or hot energy from the reconversion of NH_3 and LOHC.

Market Failures and Recommended Governmental Actions

The primary bottleneck preventing market acceleration is a coordination failure across the international supply chain, severely compounded by offtake risk. **Because import terminal operations account for only 10–20% of the total LCOH, direct CAPEX or price differential subsidies applied to the terminals alone are not the most effective strategy to trigger market development**. Instead, the lack of guaranteed offtake limits project bankability, causing financiers to charge high risk premiums. To mitigate these risks, the following governmental actions are recommended:

- **State-Backed Guarantees**: Providing **guarantees for the import terminal CAPEX** can significantly **lower perceived risk** among private financiers, effectively reducing project interest rates.
- **Demand Creation**: **Increasing the value of green hydrogen through "multipliers"** can stimulate local demand and **increase the perceived value of imported low-carbon hydrogen**.
- **Direct State Involvement**: The **government could directly coordinate local supply chain actors to derisk projects abroad**, similar to the successful "Japan Inc." model used during the early development of the LNG market.
- **Public Demand Aggregators**: **Establishing public or public-private entities to act as single-buyer intermediaries can pool demand**, organize supplier/off-taker auctions, and guarantee payments, thereby **resolving offtake uncertainties** (inspired by mechanisms like the SECI and H2Global models). In this case, attention would need to be paid to **effectively spread risk among the supply chain** instead of concentrating it in a single government-backed entity.

Table of contents

Executive Summary 3
Table of contents 5
List of abbreviations 7
1 Introduction 9
2 CAPEX and energy consumption of hydrogen carrier import facilities 10
2.1 CAPEX and OPEX of low-carbon hydrogen carrier import terminals 10
2.1.1 Reconversion CAPEX 10
2.1.2 Storage CAPEX 11
2.1.3 Hydrogen carriers import terminal sizing 12
2.1.4 Hydrogen carriers import terminal total CAPEX 16
2.2 OPEX of a hydrogen carrier import terminal 17
2.3 Some reflections on the low-carbon hydrogen carrier import terminals 18
3 Imported hydrogen (carrier) costs 20
3.1 International commerce of low-carbon hydrogen carriers 20
3.2 Overview of studies regarding low-carbon hydrogen carrier import supply chains 23
4 Expected revenue models for low-carbon hydrogen carrier import terminals 28
4.1 Current revenue models for LNG import terminals worldwide 28
4.2 Considerations regarding revenue models of low-carbon hydrogen import terminals 29
4.3 Additional revenue options 31
4.3.1 Import terminals as hydrogen network service providers 31
4.3.2 Valorisation of hot and cold energy 32
5 Current market and transition inefficacies around hydrogen import 35
5.1 Impact of offtake risk on cost of capital 35
5.2 Current financial support asymmetry: imports vs domestic hydrogen production 36
5.3 CAPEX and OPEX support in domestic and import value chains 37
5.4 Lack of coordination across the international value chain 39
6 Potential governmental actions to accelerate the development of low-carbon hydrogen carrier import terminals 40
6.1 State-backed guarantees 40
6.2 Demand creation via increased value of green hydrogen “multipliers” 41
6.3 Direct state involvement in loan and project finance/development 42
6.4 Public or public-private demand aggregators 45
7 Final remarks 47
8 Conclusions 50
A. Appendix 53
Import facilities description 53
LNG import terminals 53
LH_2, NH_3, and LOHC import terminals 55
Import terminal ownership structures 58
General overview of the Incoterms 60
Overview of current revenue models of LNG import terminals 62

Transfer pricing 62
Allowed revenue 62
Price arbitrage 62
Tolling fees 63
Overview of governmental actions 64
Financial derisking governmental actions 64
Demand creating governmental actions 64
Risk-sharing governmental actions 65
Regulatory and permitting governmental actions 66
Diplomatic governmental actions 66

List of abbreviations

Abbreviation	Description
BImSchG	Bundes-Immissionsschutzgesetz (German Federal Immision Protection Law)
BOG	Boil-Off Gas
BOOT	Build-Own-Operate-Transfer
BT	Benzyl Toluene
CAPEX	Capital Expenditure
CBAM	Carbon Border Adjustment Mechanism
CFR	Cost and Freight
CIF	Cost, Insurance, and Freight
CIP	Carriage and Insurance Paid To
CPT	Carriage Paid To
DAP	Delivered At Place
DDP	Delivered Duty Paid
DBT	Dibenzyl Toluene
DPU	Delivered at Place Unloaded
EHB	European Hydrogen Bank
EPC	Engineering, Procurement, and Construction
ERE	Emissiereductie Eenheden (Emission Reduction Units)
ETS	EU Emissions Trading System
EXW	Ex Works
FAS	Free Alongside Ship
FCA	Free Carrier
FID	Final Investment Decision
FLH	Full Load Hours
FOB	Free On Board
FRU	Floating Regasification Unit
HPA	Hydrogen Purchase Agreement
FSRU	Floating Storage and Regasification Unit
FSU	Floating Storage Unit
GBS	Gravity-Based Structure
GSA	General Services Administration
HBE	Hernieuwbare Brandstof Eenheden (Renewable Fuel Units)

IPCEI	Important Projects of Common European Interest
JBIC	Japan Bank for International Cooperation
KOGAS	Korea Gas Corporation
LCOH	Levelised Cost of Hydrogen
LH_2	Liquefied Hydrogen
LNG	Liquefied Natural Gas
LCOH	Levelised Cost of Hydrogen
LOHC	Liquid Organic Hydrogen Carrier
MCH	Methyl Cyclohexane
NH_3	Ammonia
OPEX	Operational Expenditure
ORV	Open Rack Vaporiser
OWE	Opschaling Waterstof-elektrolyse (Scale-up Water Electrolysis)
PPA	Power Purchase Agreement
RAB	Regulatory Asset Base
RED III	Renewable Energy Directive III
RFNBO	Renewable Fuel of Non-Biological Origin
SCV	Submerged Combustion Vaporiser
SECI	Solar Energy Corporation of India
SPA	Sales and Purchase Agreement
STS	Ship-to-Ship Transfer
TCA	Time Charter Agreement
TOL	Toluene
WACC	Weighted Average Cost of Capital

1 Introduction

There are ambitious targets set in the REDIII for the use of renewable fuels of non-biological origin (RFNBO). In the most recent *Klimaat- en Energienota* (from September 2025)[1], the Dutch cabinet is expecting that the import of hydrogen carriers, such as NH_3 (ammonia), LH_2 (liquid hydrogen), or LOHC (Liquid Organic Hydrogen Carriers), will play a larger role in decarbonizing the industry than previously expected in the first *Nationaal Plan Energiesysteem* (NPE)[2]. Hydrogen from imported carriers is expected to be injected in the future Dutch hydrogen backbone. In this sense, hydrogen carriers can be used as a flexibility option for supply and demand, and they can be used to export low-carbon hydrogen to Germany, for example. Despite the larger expected role for hydrogen carriers, there are no FIDs (Final Investment Decisions) taken for the development of commercial import facilities in the Netherlands.

The goal of this research is to provide an answer to the following research questions:

- What are the costs of hydrogen from ammonia cracking, dehydrogenated LOHCs, or regasified LH_2? How does the CAPEX of import terminals (including conversion facilities) of different hydrogen carriers (e.g. NH_3, LOHC, LH_2) compare with each other? What are the expected revenue models for low-carbon hydrogen import terminals? What is the total cost of imported hydrogen, and how does it compare with the cost of domestically produced hydrogen?

- Are there any market or transition-related failures and if so, what are the potential governmental actions that can be necessary in order to accelerate the development of low-carbon hydrogen import terminals in the Netherlands?

This document is organized into four main sections. **Section 1** introduces the report and the research questions. **Section 2** provides CAPEX and energy consumption estimates for all three carriers. Finally, we provide estimated reference costs of hydrogen carrier import terminals. **Section 3** discusses the costs of imported hydrogen carriers, introducing concepts from international commerce. In this part we provide estimated reference costs (LCOH) of imported carriers from a meta-analysis of different reports. **Section 4** contains a qualitative discussion regarding revenue models of import terminals as well as some potential new revenue options for hydrogen carrier import terminals. **Section 5** identifies and discusses some market and transition inefficacies that have led to lack of FIDs for hydrogen carrier import terminals. **Section 6** showcases potential governmental measures that could be considered to support the development of hydrogen carrier import terminals, providing specific examples of different actions/policies taken in the past and their impact on other relevant markets including green hydrogen production and LNG. **Section 7** finalises this document by providing some final remarks and reflections regarding the hydrogen carrier import terminals including the options for governmental actions.

[1] Rijksoverheid. Klimaat- en Energienota 2025. Accessed on 15-01-2026. https://www.rijksoverheid.nl/documenten/rapporten/2025/09/16/klimaat-en-energienota-2025
[2] RVO. Nationaal plan energiesysteem (NPE). Accessed on 15-01-2025. https://www.rvo.nl/onderwerpen/energiesysteem/nationaal-plan-energiesysteem

2 CAPEX and energy consumption of hydrogen carrier import facilities

In this section CAPEX and energy consumption estimates of import facilities for three different carriers (LH_2, NH_3, and LOHC) are analysed. The analysis has been done based on data available in literature. Companies developing import terminals in the Netherlands have been consulted on the findings. Even though differences exist in analysis related to the carriers in relative costs, the cost ranges presented in this study broadly align with the project estimates and fall within the band width presented. Note that this study does not aim to identify a winner in terms of relative costs but provide insights in all the cost aspects to identify where in the import chain government intervention is possible. Where deviations occur, they can be explained by differences in design, technology maturity, and the specific operational choices required for commercial-scale deployment. Some companies also stated that these costs don't include expected inflation given the geopolitical tensions and conflicts at this moment in the world.

2.1 CAPEX and OPEX of low-carbon hydrogen carrier import terminals

The CAPEX can be divided into two contributions:

- Hydrogen reconversion plant
  - LH2: physical regasification
  - NH3: cracking
  - LOHC: dehydrogenation
- Hydrogen carrier storage CAPEX
  - LH2: cryogenic tanks
  - NH3: refrigerated tanks
  - LOHC: oil tanks (with double the amount to account for LOHC-rich and LOHC-lean storage)

2.1.1 Reconversion CAPEX

In the case of reconversion plants, the reported CAPEX is in cost per throughput (e.g. per ton/year) because plant throughput is the main parameter needed to estimate cost. **Figure**

2-1 shows a range of CAPEX in EUR/tonH_2/year, for LH_2, NH_3, and LOHC, based on an aggregation done by IRENA for 2040[3] as well as an estimation done by the IEA for 2030[4].

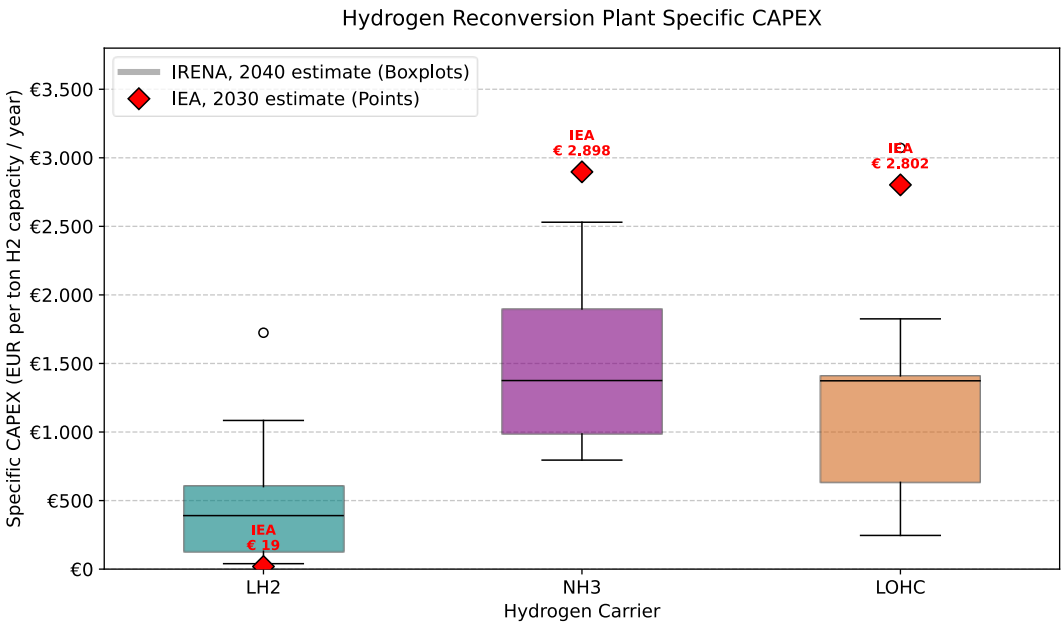

Figure 2-1. CAPEX of the reconversion part of a hydrogen import terminal, in EUR/ton H_2/year, for LH_2, NH_3, and LOHC, estimated for 2040. (Boxplots) Data published by IRENA for 2040. (Red diamonds) Estimation done by IEA for 2030.

2.1.2 Storage CAPEX

In the case of storage, the reported CAPEX is in cost per stored fuel (e.g. ton H_2) because, unlike reconversion, the cost of storage is typically determined by the amount of stored fuel, not the throughput of the reconversion plant.

There is a key difference between LOHC and the other carriers: while in the case of LH2 the carrier consists of pure H2 and in the NH3 case the N2 freed up after cracking is released to the atmosphere, in the LOHC case the H2 is stored in the LOHC itself. This means that the CAPEX of a storage facility of an LOHC consists of both the CAPEX of the physical tanks and the CAPEX of the 'first fill' of LOHC into the tanks.

Figure 2-2 shows the CAPEX of the carrier storage in EUR/ton H_2, for LH_2, NH_3, and LOHC as a function of storage capacity, based on the IRENA data for 2040, as well as the IEA data for 2030.

[3] IRENA (2022). Global hydrogen trade to meet the 1.5°C climate goal Part II. Technology review of hydrogen carriers. https://www.irena.org/-/media/Files/IRENA/Agency/Publication/2022/Apr/IRENA_Global_Trade_Hydrogen_2022.pdf?rev=3d707c37462842ac89246f48add670ba

[4] IEA (2024). Global Hydrogen Review 2024. Assumptions Annex. https://iea.blob.core.windows.net/assets/36017d2f-747b-4993-b06d-33209fe143fa/GHR24AssumptionsAnnex.pdf

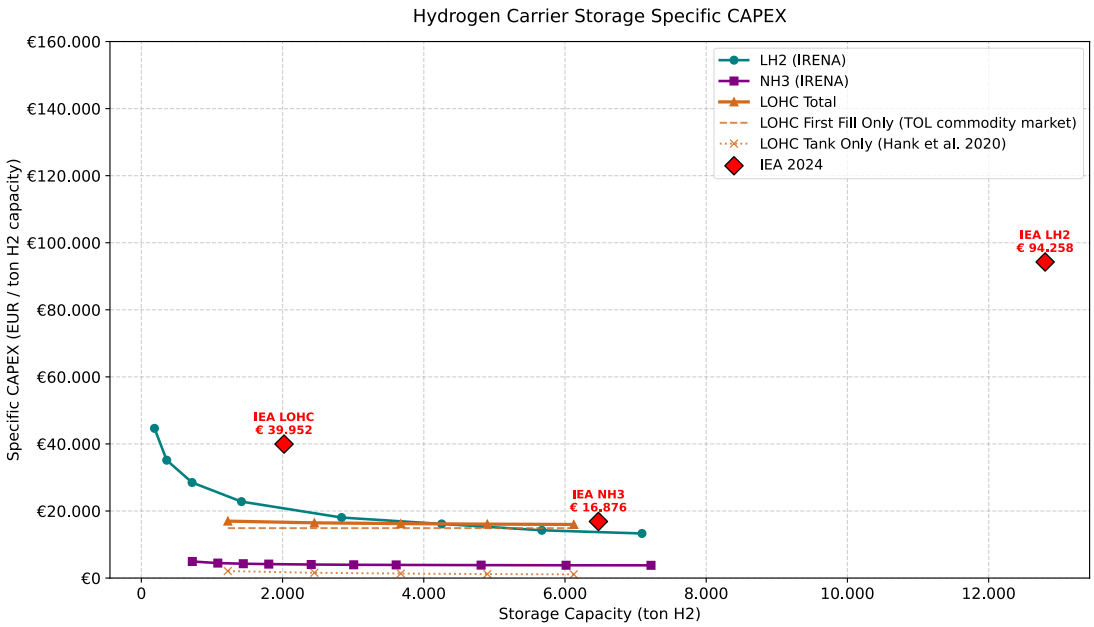

Figure 2-2. CAPEX of hydrogen carrier storage, in EUR/ton H_2, as a function of installed storage capacity. (Lines) Data published by IRENA for 2040. (Red diamonds) Estimation done by IEA for 2030. For LOHC the specific CAPEX was divided in tank farm-only and 'first fill' costs. Since it was unclear whether the IRENA costs including the first fill, the tank farm cost was taken from Hank et al 2020[5], and the first fill costs were based on the toluene market prices for January 2026[6]. Note: the value reported by IEA for LOHC is being corrected by a factor 10 due to a discrepancy in their published data.

2.1.3 Hydrogen carriers import terminal sizing

The sizing of LNG import terminals is typically based on the size and operations of the LNG tankers, which means that we can reasonably expect that, to be able to estimate the size and cost of hydrogen carrier import terminals, we need to estimate the operation of (future) low carbon hydrogen carrier tankers. Parameters that are considered for the import terminal sizing include:

- **Tanker storage capacity (storage sizing)**. The import terminal would need to enough storage for an average tanker to offload its contents. Maybe also the import terminal would like to offload the cargo of a second tanker while simultaneously reconverting the content of the first. Using a too small terminal storage capacity can lead to 'demurrage' penalties i.e. costs that a ship operator needs to pay the ship owner for detaining vessels beyond agreed-upon laytime periods[7] (for example, a parked tanker waiting too long to offload its content). In the case of LNG, there can also be differences between large onshore terminals and FSRUs; the former might be able to hold the cargo of several tankers while the latter might only be able to store the cargo of one tanker at a time. From the GIIGNL Annual Review 2025, the average storage capacity of European LNG import terminals is around 320.000 m^3,

[5] Hank, C., Sternberg, A., Köppel, N., Holst, M., Smolinka, T., Schaadt, A., Hebling, C., & Henning, H.-M. (2020). Energy efficiency and economic assessment of imported energy carriers based on renewable electricity. Sustainable Energy & Fuels, 4(5), 2256–2273. https://doi.org/10.1039/D0SE00067A
[6] Business AnalytIQ. Toluene Price Index. Accessed on 09-02-2026. https://businessanalytiq.com/procurementanalytics/index/toluene-price-index/
[7] Marine Public. Demurrage in Tanker Cargo: Essential Documentation Tips. Accessed on 09-02-2026. https://marinepublic.com/blogs/oil-and-gas/861193-demurrage-in-tanker-cargo-essential-documentation-tips

the average LNG tanker storage capacity is 149.200 m^3, although new LNG tankers are being built and delivered with an average storage capacity of 174.000 m^3. This means that the **storage capacity of import terminals is on average 2x of the tanker storage capacity**.

- **Inter-Arrival Time (reconversion sizing)**. This is the time it takes an import terminal to reconvert the content of one tanker. While there is no particular rule-of-thumb for the Inter-Arrival Time, this can be extrapolated from the LNG import terminal operations by looking at the average regasification installed capacity and the average LNG tanker sizes. According to the GIIGNL Annual Review 2025, the average LNG tanker storage capacity is 149.000 m^3, although new LNG tankers are being built and delivered with an average storage capacity of 174.000 m^3. The average installed regasification capacity in European LNG import terminals is 5 million tonnes per year (approx. 10,7 million m^3 per year). Inter-Arrival Time (tanker storage divided by regasification capacity) would be in the range of 5,1 days (for the average LNG tanker) and 5,9 days (for the new LNG tankers). In this study we selected a value in the middle of the range. This means that **the Inter-Arrival Time of European LNG import terminals is around 5,5 days.**

Table 2-1 shows the expected hydrogen carrier import terminal storage and reconversion installed capacities, based on the rules of thumb derived from the LNG industry. As such, this is a theoretical assumption; in practice, this also depends on parameters including the unloading rate of the tankers, whereby import terminal design may vary. For example, different terminal developers could have a smaller or larger storage or regasification rate, which can independently optimised. Note that, while for NH_3 and LOHC there is either an existing tanker fleet with a range of capacities, for LH_2 there is no tanker fleet yet, which means that the analysis is based on the two existing projects to build LH_2 tankers, either First Generation (40.000 m^3 LH_2) or Second Generation (80.000 m^3 LH_2).

Table 2-1. Tanker sizes and expected import terminal storage and reconversion installed capacities for different hydrogen carriers.

Hydrogen Carrier	Tanker size [ton H_2/tanker]	Import terminal storage installed capacity [ton H_2]	Import terminal reconversion installed capacity [ton H_2/year]
LH_2	**~2.800-ton H_2** (40.000 m^3 Kawasaki "First Gen" LH_2 tanker[8])	2.800 x 2 = **5.600 ton H_2** (First Gen)	2.800 / 5,5 days = **186.000-ton H_2/year** (First Gen)
	~5.600-ton H_2 (80.000 m^3 Samsung Heavy Industries "Second gen" LH_2 tanker[9])	5.600 x 2 = **11.200 ton H_2** (Second Gen)	5.600 / 5,5 days = **372.000-ton H_2/year** (Second Gen)
NH_3	**~450-ton H_2** (2.500 ton Lower-End LPG tanker)	450 x 2 = **900-ton H_2** (Lower End)	450 / 5,5 days = **30.000-ton H_2/year** (Lower End)
	~7.000-ton H_2 (40.000 ton Upper-End LPG tanker)	7.000 x 2 = **14.000-ton H_2** (Upper End)	/ 5,5 days = **465.000-ton H_2/year** (Upper End)
LOHC	**~250-ton H_2** (5.000 dwt Lower-End Chemical tanker. TOL)	250 x 2 = **500-ton H_2** (Lower End)	250 / 5,5 days = **17.000-ton H_2/year** (Lower End)
	~3.000-ton H_2 (59.000 dwt Upper-End Chemical tanker. TOL)	3.000 x 2 = **6.000-ton H_2** (Upper End)	3.000 / 5,5 days = **200.000-ton H_2/year** (Upper End)
Reference import terminal size	**~3.000-ton H_2**	**6.000-ton H_2**	**200.000-ton H_2/year**
		Equivalent electrolysis capacity [MW]	**1.283**

From the (projected) state-of-the-art tankers in

[8] Renewable Energy Magazine. Kawasaki Signs Contract to Build World's Largest 40,000 m3 Liquefied Hydrogen Carrier. Accessed on 09-02-2026. https://www.renewableenergymagazine.com/hydrogen/kawasaki-signs-contract-to-build-worlda-s-20260106#:~:text=Tuesday%2C%2006%20January%202026,a%20capacity%20of%2040%2C000%20m3.

[9] Ship & Bunker. DNV Approves Design of Liquefied Hydrogen Carrier. Accessed on 09-02-2026. https://shipandbunker.com/news/world/653799-dnv-approves-design-of-liquified-hydrogen-carrier#:~:text=by%20Ship%20%26%20Bunker%20News%20Team,80%2C000%20m3%20liquefied%20hydrogen%20carrier.

Table 2-1, a “reference” import terminal is defined as an import terminal where all three carriers have an overlap in tanker capacity. It does not necessarily mean the average of the tanker fleet sizes, but rather a tanker capacity that all three hydrogen carriers could deliver. In this case, we define a reference capacity (based on tanker capacity) of 6.000-ton H_2 storage and 200.000-ton H_2/year reconversion. For a size equivalence, a ~1,3 GW electrolyser would produce the same amount of hydrogen as the reconversion unit.

2.1.4 Hydrogen carriers import terminal total CAPEX

Using the information regarding sizing, an estimation of the import terminal CAPEX can then be done based for the reference import terminal (6,000-ton H_2 storage capacity, 200,000-ton H_2/year hydrogen reconversion capacity) on two benchmarks:

- The IRENA data for 2040
- The IEA data for 2030

Note that all figures were sourced from the respective publications, and it was assumed that the values corresponded to Full EPC (Engineering, Procurement, and Construction) i.e. considering equipment as well as installation costs. Table 2-2 and Figure 2-3 show the CAPEX calculation of the reference hydrogen carrier import terminal for all three hydrogen carriers.

Table 2-2. CAPEX of a “reference” hydrogen carrier import terminal 6.000-ton H2 storage capacity, 200.000-ton H2/year hydrogen reconversion capacity), based on LH2, NH3, and LOHC, and using the IEA 2030 and the IRENA 2040 data.

Hydrogen Carrier	Specific storage CAPEX [EUR/ton H_2]	Total storage CAPEX [EUR]	Specific reconversion CAPEX [EUR/ton H_2/year]	Total reconversion CAPEX [EUR]	Total CAPEX [EUR]
LH2, IEA (2030)	€ 94.258	€ 565.546.875	€ 19	€ 3.800.000	€ 569.346.875
LH2, IRENA (2040)	€ 14.030	€ 84.181.523	€ 390	€ 78.074.384	€ 162.255.907
NH3, IEA (2030)	€ 16.876	€ 101.257.075	€ 2.898	€ 579.500.000	€ 680.757.075
NH3, IRENA (2040)	€ 3.824	€ 22.945.913	€ 1.375	€ 275.067.620	€ 298.013.533
LOHC, IEA (2030)	€ 39.952	€ 239.709.516	€ 2.802	€ 560.500.000	€ 800.209.516
LOHC, IRENA (2040)	€ 16.001	€ 96.005.574	€ 1.374	€ 274.706.164	€ 370.711.738

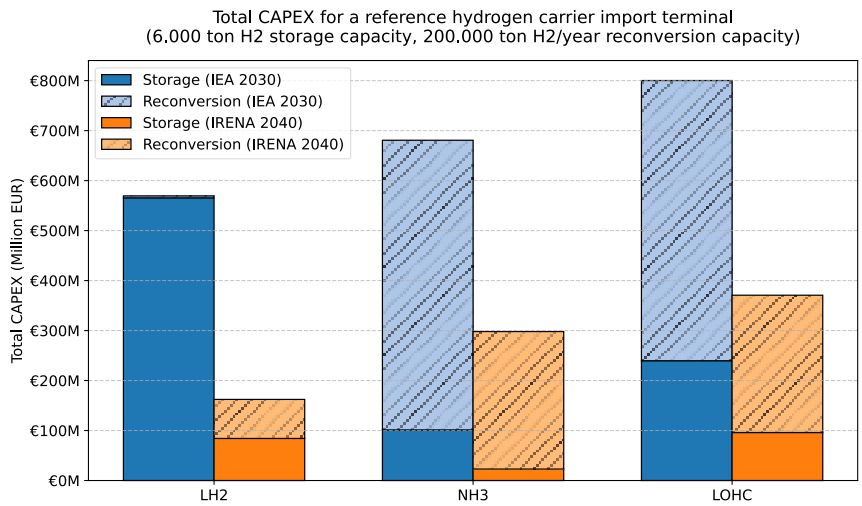

Figure 2-3. Total CAPEX of a "reference" hydrogen carrier import terminal, based on the IEA 2030 and the IRENA 2040 data.

It is important to mention that these are numbers for different years and using different assumptions. While the IRENA data was aggregated from different references, all references' storage and reconversion sizes vary significantly. In the case of the IEA data, it was not clear whether the information came from publicly available sources or if it was developed in direct consultation with industry. As such, it is not clear why these numbers are very different. The companies consulted as part of this study tended to agree more with the costs presented by IEA, with the caveat that there was significant discrepancy in the perceived costs of ammonia cracking.

2.2 OPEX of a hydrogen carrier import terminal

Energy consumption (variable OPEX) is expected to be the largest contributor to OPEX in a hydrogen carrier import terminal. Energy consumption is divided in two:

- **Heat consumption** for the chemical hydrogen reconversion. Depends on energy efficiency of the plant (burner efficiency, heat recovery, etc.)
  - LH2: non-existent (physical reconversion)
  - NH3: 4,2-7 kWh/kgH_2
  - LOHC: 8-11 kWh/kgH_2 (depending on the LOHC carrier)

- **Electricity consumption** for the operation of the plant (excluding reconversion).
  - LH2: 0,1-1 kWh/kgH_2 (depending on Boil-Off Gas management strategy)
  - NH3, LOHC: 0,3-0,5 kWh/kgH_2

There are two main foreseen operational strategies of import terminals regarding heat:

- **Autothermal operation.** This means that the terminals use part of the H_2 carrier (or the H_2 itself) to provide the heat needed for the hydrogen reconversion.

- **External heating**. Operation of the plants is done using external heat sources, for example fuel (natural gas) or electricity.

Some plants are foreseen to have autothermal operation, which impacts directly the hydrogen recovery i.e. the amount of hydrogen they can recover from an incoming shipment. In

this sense, the variable OPEX is not necessarily a “cost” that needs to be paid to an energy provider, but a “lost revenue” of the hydrogen. **Figure 2-4** shows an example of the impact of process heat consumption for different carriers on 1) hydrogen recovery rates or 2) external energy required.

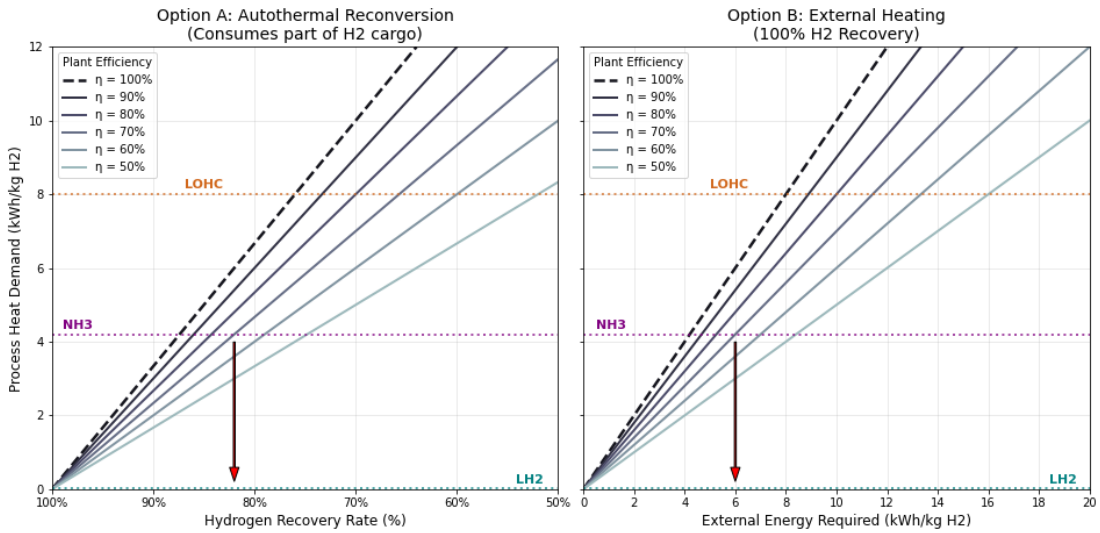

Figure 2-4. (Left) Process heat demand of import terminals as a function of hydrogen recovery. (Right) Process heat demand of import terminals as a function of external energy required. (Horizontal dashed lines) minimum heat consumption of different hydrogen carriers. (Diagonal lines) different plant efficiency levels. As example: NH_3 cracking with a 70% efficiency, would have either a ~82% hydrogen recovery (autothermal operation), or would require ~6 kWh/kgH_2 of external energy consumption (external heating).

Additionally, to the variable OPEX that, as we discussed, can either be an operational cost or a lost revenue, import terminals will have a fixed OPEX. The fixed OPEX, which includes operations, maintenance, and other non-variable expenses, is typically expected to be an annual expenditure equal to between 2 and 5% of the CAPEX of the plant.

2.3 Some reflections on the low-carbon hydrogen carrier import terminals

In this section we discuss a few insights regarding the physical layout and costs of low-carbon hydrogen carrier import terminals.

The layout of low-carbon hydrogen carrier import terminals is expected to be largely similar to LNG import terminals: they would all contain, jetties, berths, loading arms, storage, reconversion, and send-out, regardless of the type of hydrogen carrier. The main differences between low-carbon hydrogen carriers are in the storage and reconversion steps.

Regarding storage, LH_2 storage is perhaps the lowest TRL of the three (LH_2, NH_3, LOHC), although in the LOHC case, while the actual LOHC storage deployment is at TRL 6, the technology needed for LOHC storage itself (tanks for refined oil products) is itself at TRL 9.

While it is not the intention that LH_2 would replace LNG as energy commodity, the comparison between LH_2 and LNG is made so that the reader can better understand the orders of magnitude of current commercial LNG import storage operations, as well as the existing situation regarding LH_2 storage.

As a means of comparison, the GATE LNG import terminal (fully onshore-based) consists at the moment of 3 LNG storage tanks (with a fourth one in construction) with a current total storage capacity of 540.000 liquid m^3, while the EemsEnergyTerminal (FSRU-based) has 6 tanks and a total storage capacity of 195.000 liquid m^3. This means that the per tank storage of both terminals is, respectively, 180.000 and 32.500 liquid m^3 per tank. For reference, the largest LH_2 storage tank at the NASA Kennedy Space Center, one of the largest LH_2 storage tanks in operation, has a storage capacity of 4.732 liquid m^3 per tank. This means that for LH_2 storage to be at the size of the LNG storage in a fully onshore terminal (e.g. GATE) or an FSRU (e.g. the EemsEnergyTerminal), LH_2 tanks would need to be roughly 38 and 7 times larger, respectively.

The question is whether LH_2 storage can be realistically scaled up to the levels of LNG storage. It could be that LH_2 storage is not scaled-up yet due to lack of demand, but also there could be important constraints in the current designs of LH_2 terminals due to the considerably lower temperature of LH_2 (-253ºC) with respect to LNG (-162ºC), which may set a limit to the maximum size of LH_2 storage tanks. That being said, there are examples of larger LH_2 tanks currently in development: Kawasaki Heavy Industries has recently announced that they are developing an above-ground flat-bottom cylindrical storage tank with a 50,000 m^3 capacity, which is more in line with the state of the art of LNG storage[10].

Both NH_3 storage and LOHC storage are not expected to be a bottleneck. NH_3 storage is already a fully commercial industry and, while LOHC storage is not done at commercial scale, the lessons learned from e.g. crude oil and refined products terminals could be directly applicable to LOHC.

Regarding hydrogen reconversion, there are nuances regarding all three carriers:

- **LH_2**: despite LH_2 regasification not being done at scale (it is mostly done in e.g. liquid hydrogen refuelling stations), since this is a physical operation that requires only heat addition, we can reasonably expect that LH_2 uses the lessons learned from LNG regasification in order to scale up.

- **NH_3**: large-scale ammonia cracking is being developed but it is still at a pilot scale.

- **LOHC**: dehydrogenation of LOHC is also being developed but it is also still at pilot scale. The question here is to what extent the existing knowledge in dehydrogenation processes in the food and the oil and gas industries, could be transferrable to LOHC dehydrogenation in order to accelerate its development.

Finally, it may be interesting for potential import terminal developers or for the government, to look at the option of supporting the development of FSRUs for low-carbon hydrogen carrier import terminals, due to the potential of FSRUs to be a cost-effective alternative (in the short term) for deploying hydrogen import infrastructure.

[10] Kawasaki. Fabrication of Large Liquefied Hydrogen Storage Tank Launched - Toward the Establishment of Liquefied Hydrogen Supply Chain -. Accessed on 13-04-2026. https://global.kawasaki.com/en/corp/newsroom/news/detail/?f=20250807_3407

3 Imported hydrogen (carrier) costs

In this section the LCOH of imported hydrogen has been estimated for three different carriers (LH_2, NH_3, and LOHC). The analysis has been done based on a wide survey of publicly available literature and no LCOH calculations were carried out explicitly for this study. Companies developing import terminals in the Netherlands have been consulted on the findings but, unlike the previous section, little feedback was received regarding the LCOH data presented here. Note that this study does not aim to identify a winner in terms of best carrier to import but provide insights in the LCOH to identify where in the import chain government intervention is possible. Where deviations occur, they can be explained by differences in assumptions, country of origin of the hydrogen, costs of exporting and shipping, as well as design, technology maturity, and the specific operational choices required for commercial-scale deployment. Some companies also stated that these costs don't include expected inflation given the geopolitical tensions and conflicts at this moment in the world.

3.1 International commerce of low-carbon hydrogen carriers

A simplified diagram explaining the different steps in a low-carbon hydrogen carrier import supply chain is provided in **Figure 3-1**.

Figure 3-1. Overview of the (expected) steps in a low-carbon hydrogen carrier import supply chain.

1. **Hydrogen production** entails the production of hydrogen, either via electrochemical processes (e.g. electrolysis) or thermochemical processes (e.g. reforming of natural gas).

2. **Conversion to hydrogen carrier** entails the production of a "hydrogen carrier" e.g. LH_2, NH_3, or the hydrogenation of a LOHC

3. **Loading onto ship** entails the physical loading of the hydrogen carrier on a ship for overseas shipping. Steps 2 and 3 are likely to be done within a single facility i.e. an export terminal.

4. **Shipping** entails the ship's voyage between the export terminal and the import terminal.

5. **Unloading onto storage at import site** entails the unloading of the ship's cargo onto a storage (e.g. refrigerated or cryogenic tanks).

6. **Reconversion to hydrogen** entails the physical conversion e.g. regasification of LH_2, or chemical conversion e.g. cracking of NH_3 or dehydrogenation of a LOHC. Steps 5 and 6 are likely to be done within a single facility i.e. an import terminal.

7. **Last-mile delivery** includes the delivery of hydrogen from the import terminal to an end-user e.g. via injection into pipeline or transport via tube trailers. Another likely scenario is "trans-shipment" of the carrier where hydrogen carrier is handed over to a last-mile delivery form (e.g. a cryogenic tube trailer for LH_2). In this case, the reconversion step would be done after last-mile delivery (assuming that reconverted hydrogen is the intended final use).

In the international commerce of commodities (including energy carriers such as LNG), there are strict rules and responsibilities lined up for both buyers and sellers. This set of rules and responsibilities can vary with depending on at which step of the supply chain the "official" handover ("transfer") of the physical commodity takes place. In this case, there is an internationally agreed terminology for the rules and responsibilities, which are called "Incoterms". Incoterms are a set of individual rules that define the responsibility split between sellers and buyers depending on the types of agreement. An overview of the Incoterms can be found in the Appendix. While the specific clauses in the division of responsibility between buyers and sellers is specified in their respective contracts, Incoterms are used as a common language for international commerce.

Table 3-1 shows some representative Incoterms that show different responsibilities across sellers and buyers, referred to the steps in a low-carbon hydrogen carrier import supply chain as discussed above.

Table 3-1. Selected Incoterms (2020) and indicative division of responsibilities between a Seller and a Buyer in the context of low-carbon hydrogen carrier supply chain.

Supply chain step	EXW "Ex-Works" (hydrogen only)	FOB "Free On Board"	CIF "Cost Insurance and Freight"	DAP "Delivered At Place"	DPU "Delivered at Place Unloaded"	DDP "Delivered Duty Paid"
1 Hydrogen production	Seller	Seller	Seller	Seller	Seller	Seller
2 Conversion to hydrogen carrier	Buyer	Seller	Seller	Seller	Seller	Seller
3 Loading onto ship	Buyer	Seller	Seller	Seller	Seller	Seller
4 Shipping	Buyer	Buyer	Seller	Seller	Seller	Seller
5 Unloading onto storage at import site	Buyer	Buyer	Buyer	Seller	Seller	Seller
6 Reconversion to hydrogen	Buyer	Buyer	Buyer	Buyer	Seller	Seller
7 Last-mile delivery	Buyer	Buyer	Buyer	Buyer	Buyer	Seller

As shown on **Table 3-1**, we can expect different types of Incoterms in different studies of international hydrogen import studies:

- **EXW**. Most studies that calculate the cost of hydrogen production at a particular location, without any further hydrogen carrier conversion, would fall into this Incoterm.

- **FOB**. Most studies that involve hydrogen production and conversion to hydrogen carrier e.g. Haber-Bosch for the production of ammonia, liquefaction of hydrogen to produce LH_2, or the hydrogenation of Toluene to produce MCH, could fall into this category, as long as they do not include shipping costs.

- **CIF/CFR**. This Incoterm would apply if the study included the shipment costs as well. The main difference between CIF and CFR (Cost and Freight) is whether the cost of insurance of the ship's cargo is (implicitly) included in e.g. the OPEX of the shipping costs.

- **DAP**. This Incoterm would place the cost of hydrogen reception at the storage terminal and subsequent carrier reconversion on the buyer, so most hydrogen carrier cost studies that include "delivery at Port of Rotterdam" could fall into this category. DES (Delivered Ex-Ship) is an old Incoterm used e.g. in LNG shipping, where the transfer of responsibility of an LNG cargo happens on the physical connection between the ship's manifold and the import terminal's loading arm. DAP is used instead of DES since the publication of the Incoterms 2020, and an equivalence can be made between DAP and DES if the "place nominated" for the transfer of responsibility in DAP, is the same location as in DES.

- **DPU**. The main difference between DAP and this Incoterm, is that the seller takes responsibility for the unloading of the shipment into the import facility. Depending on the specific contractual specifications, we could also assume that in DPU the seller takes responsibility for the reconversion of the carriers to hydrogen.

- **DDP**. This Incoterm would make the seller the sole responsible party of the complete supply chain i.e. delivering hydrogen to the doorstep of a buyer. The main difference between DPU and DDP would be the import duties and last-mile delivery. If the final use were to be the hydrogen carrier itself instead of reconversion of carrier, the Incoterm would not include the reconversion to hydrogen. Since for this situation there is no specific Incoterm, for the studies where the hydrogen carrier is the intended commodity to be used, we are making up one extra category "DDP EX" (DDP excluding reconversion) to account for this situation.

For context, the international shipping of LNG works with two main Incoterms: FOB and DAP/DES[11]. This is due to reasons including:

- **FOB** allows the buyer to select the shipping carrier, the import terminal, etc. Among other things, this allows the buyer the freedom to carry out price speculation on different markets e.g. a buyer can potentially reroute an LNG shipment from one destination to another.

[11] BP. LNG master sales and purchase agreement. Accessed 01-12-2025. https://www.bp.com/en/global/bp-supply-trading-and-shipping/documents-and-downloads/technical-downloads/lng-master-sales-and-purchase-agreement.html

- **DAP/DES** keeps the seller's responsibility up to the import terminal. Among other things, this allows the seller to secure that the destination of the LNG is as originally agreed upon but also gives the buyer the certainty that the LNG will be delivered at the selected location.

3.2 Overview of studies regarding low-carbon hydrogen carrier import supply chains

In the area of hydrogen, most studies do not clarify what Incoterms the international shipping of hydrogen would have, because these studies are aimed at the whole supply chain regardless of the division of responsibilities. It is often unclear which costs are considered in imported hydrogen cost figures in academic as well as industrial literature. This leads to a wide discrepancy in the reporting of costs of international hydrogen (carrier) supply chains.

As example, **Table 3-2** shows a few studies that have reported values for international hydrogen carrier supply chains. The reports highlighted do not explicitly report which Incoterm the analysed value chains would fall into; therefore, we attempted to make an Incoterm classification in each of the reports, based on the assumptions and considerations in each study and the discussion above.

Table 3-2. Overview of selected studies around costs of low-carbon hydrogen carrier supply chains (LH_2, NH_3, and LOHC), together with a categorization based on Incoterms. Note that this is not a formal meta-study but rather a depiction of recent studies, with no particular selection strategy being used for the depicted projects. TOL = Toluene, BT = Benzyl Toluene, and DBT = Dibenzyl Toluene.

Study (year)	Country of origin of the hydrogen	Destination	Hydrogen carrier	Levelized cost of hydrogen imported [EUR/kg]	Potential Incoterm	Comments
Wolf et al. (2024)[12]	Norway, Spain, Morocco, Australia	Germany	LH_2 LOHC (DBT)	1,73-3,40 (LH_2) 2,33-7,05 (LOHC)	Not applicable	Cost of transport only i.e. excludes hydrogen production and hydrogen carrier production.
Fraunhofer H_2Global study (2023)[13]	Various	Germany	LH_2 NH_3	5,64-10,56 (LH_2) 5,64-9,14 (NH_3)	CIF	The study doesn't seem to include import duties or reception at an import terminal.

[12] International supply chains for a hydrogen ramp-up: Techno-economic assessment of hydrogen transport routes to Germany - ScienceDirect

[13] Fraunhofer ISE (2023). Site-specific, comparable analysis for suitable power-to-X pathways and products in developing and emerging countries. https://www.ise.fraunhofer.de/en/publications/studies/power-to-x-country-analyses.html

Zhao et al. (2023)[14]	Unspecified (offshore wind-based hydrogen production)	Unspecified (100/450 km from production site)	NH_3	11,50-15,93	CIF	This study factors in the amount of hydrogen recovery from the ammonia cracking but does not include the actual cracking costs.
Clean Air Task Force (2023)[15]	Arabian Gulf, United States, Argentina, Norway	Netherlands	LH_2 NH_3 LOHC (TOL)	3,60-7,30 (LH_2) 2,10-4,90 (NH_3) 3,60-8,10 (LOHC)	DPU (before send-out)	This is the only report of this list that is based on blue hydrogen (i.e. SMR with CCS).
TNO (2024)[16]	Canada, Morocco, Australia	Netherlands	LH_2 NH_3 LOHC (TOL)	8,08-9,39 (LH_2) 6,65-7,25 (NH_3) 7,96-8,08 (LOHC)	DPU (before send-out)	Includes production, liquefaction, transport, and regasification, but not last-mile delivery.
Choi et al. (2024)[17]	Australia	South Korea/Japan	LH_2	11,96-30,21	DPU (before send-out)	Includes production, liquefaction, transport, and regasification, but not last-mile delivery.
CEDelft (2025)[18]	Saudi Arabia	Netherlands	LH_2 NH_3 LOHC (BT)	7,30-8,80 (LH_2) 6,40-8,30 (NH_3) 8,60-10,40 (LOHC)	DPU (buyer's site)	Hydrogen (pipeline) network tariff was included but not import duties.
Scheffer et al. (2025)[19]	Australia, Tunisia	Germany	NH_3 LOHC (BT)	4,78-5,59 (NH_3) 6,01-7,69 (LOHC)	DPU (buyer's site)	Hydrogen (pipeline) network tariff was included but not import duties.
Seeger et al. (2025)[20]	Algeria, Canada, Chile	Germany	LH_2 NH_3	3,00-8,70 (LH_2) 3,80-10,00 (NH_3)	DPU (buyer's site)	Hydrogen (pipeline) network tariff was included but not import duties.

[14] Zhao, F., Wang, Z., Dong, B., Li, M., Ji, Y., & Han, F. (2023). Comprehensive life cycle cost analysis of ammonia-based hydrogen transportation scenarios for offshore wind energy utilization. Journal of Cleaner Production, 429, 139616. https://doi.org/10.1016/j.jclepro.2023.139616

[15] CATL (Clean Air Task Force) (2023). Realities of Long-Distance Hydrogen Transport. https://cdn.catf.us/wp-content/uploads/2023/09/25153519/catf-kbr-hydrogen-transport.pdf

[16] TNO (2024). Costs and greenhouse gas emissions of international hydrogen supply chains. Report number TNO 2024 R11527. https://publications.tno.nl/publication/34643318/oaDwG5jH/TNO-2024-R11527.pdf

[17] Choi, H., Lee, H., Han, J., & Roh, K. (2024). Revisiting the cost analysis of importing liquefied green hydrogen. International Journal of Hydrogen Energy, 82, 817–827. https://doi.org/10.1016/j.ijhydene.2024.07.418

[18] CEDelft (2025). Waterstof: kostprijs, import, beleid. Met focus op de rol van import, low carbon en vraagcreatie. https://cedelft.eu/wp-content/uploads/sites/2/2025/11/CE_Delft_240139_Waterstof_kostprijs_import_beleid_DEF.pdf

[19] Scheffler, F., Imdahl, C., Zellmer, S., & Herrmann, C. (2025). Techno-economic and environmental assessment of renewable hydrogen import routes from overseas in 2030. Applied Energy, 380, 125073. https://doi.org/10.1016/j.apenergy.2024.125073

[20] Seeger, K., Genovese, M., Schlüter, A., Kockel, C., Corigliano, O., Díaz Canales, E. B., Praktiknjo, A., & Fragiacomo, P. (2025). Techno-economic analysis of hydrogen and green fuels supply scenarios assessing three import routes: Canada, Chile, and Algeria to Germany. International Journal of Hydrogen Energy, 116, 558–576. https://doi.org/10.1016/j.ijhydene.2025.02.379

H_2Global first pilot auction (2024)[21]	Egypt	Netherlands	NH_3	5,64	DDP "EX"	Includes import duties in the cost but not reconversion costs. It is assumed that the reported "transport charges" include last-mile delivery.

On **Table 3-2** it can be seen that most international supply chain studies include either the costs from hydrogen production up to shipping (i.e. steps 1 through 4), but not unloading at import terminal (step 5), hydrogen reconversion (step 6), and last-mile delivery (step 7), or include the costs from production up to hydrogen reconversion (steps 1 through 6), but not last-mile delivery (step 7). This means that the contribution of import costs is not always considered in different import studies.

Considering the information above, we made an aggregation of the studies from **Table 3-2** that include the value chain between production and reconversion (steps 1-6) i.e. the studies that we classified under the Incoterm DPU. **Figure 3-2** shows the LCOH of different hydrogen carriers, and **Figure 3-3** shows the LCOH breakdown into production, export terminal, shipping, and import terminal costs (including hydrogen reconversion).

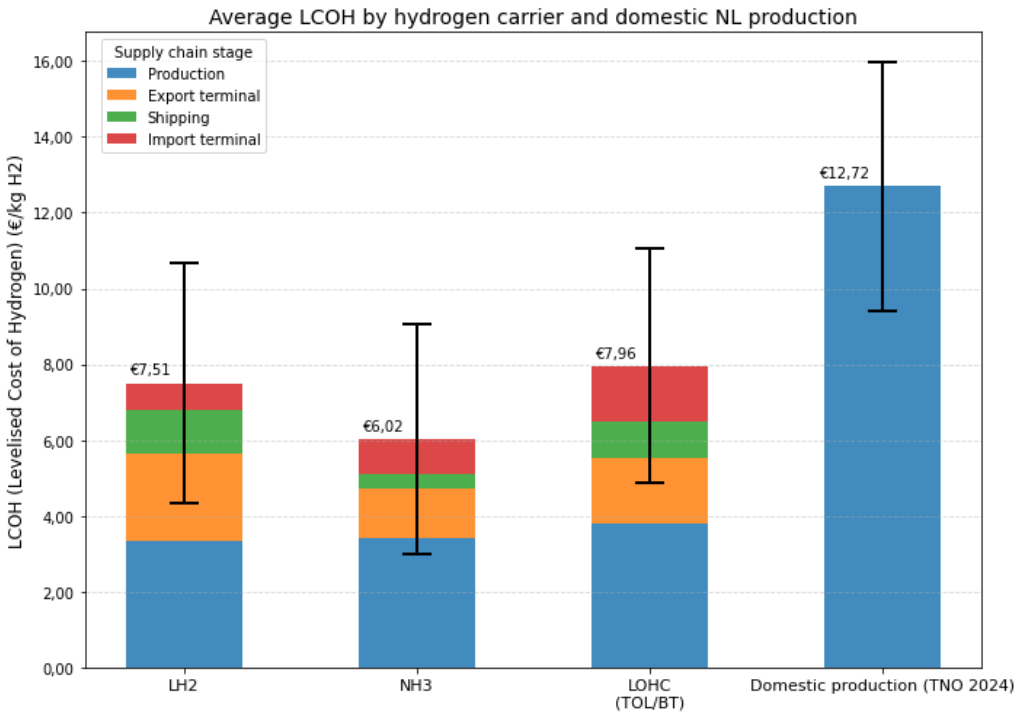

Figure 3-2. LCOH of different carriers, broken down in production, export terminal, shipping, and import terminal costs, based on the analysis of different studies, as well as LCOH of domestic hydrogen production in the Netherlands. Note that industrial parties were asked to comment about these numbers and, although input was received about specific details, the general comments fell within the range of the bandwidth presented in this study.

[21] Hintco (2024). H_2Global's pilot auction results. https://H_2-global.org/wp-content/uploads/2025/06/H_2g-auction-results-slide-deck.pdf

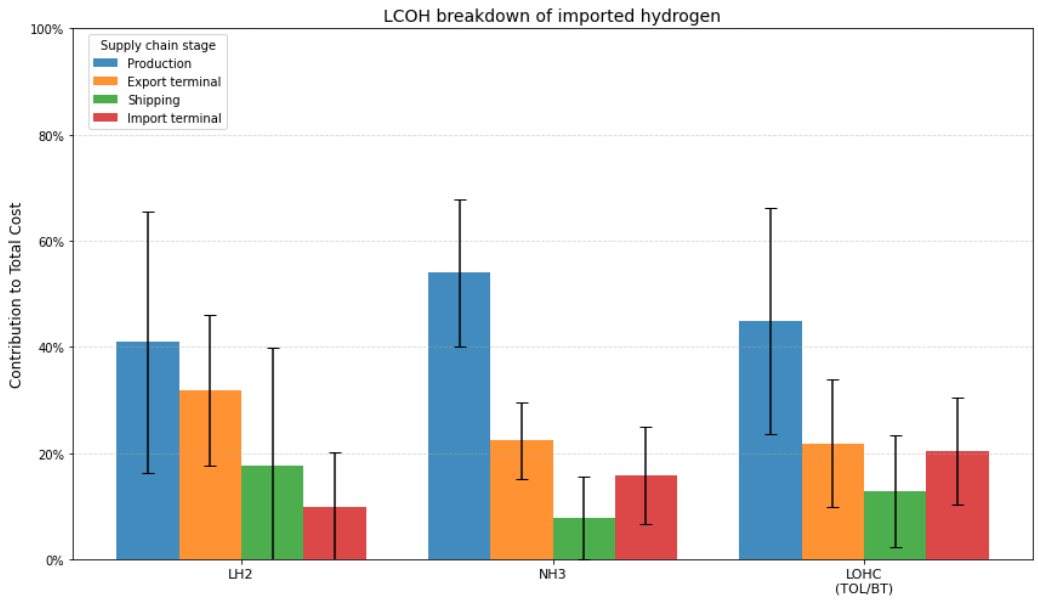

Figure 3-3. LCOH breakdown for all three different hydrogen carriers in production (blue), export terminal (yellow), shipping (green), and import terminal (red) costs. Note that industrial parties were asked to comment about these numbers and, although input was received about specific details, the general comments fell within the range of the bandwidth presented in this study.

We can note from **Figure 3-2** and **Figure 3-3** that hydrogen production dominates the calculated LCOH for all the hydrogen carriers, taking up as much as 50% of the LCOH of the imported molecule. Moreover, the hydrogen production abroad seems to be considerably lower than the domestic production in the Netherlands: between € 3 and € 4/kg H_2 for the production abroad and almost € 13/kg H_2 for the domestic production. On the one hand this highlights the motivation for importing hydrogen carriers: being able to capture those low prices would mean a closer competition with domestic sources and overall, a cheaper means of decarbonising the sectors where the imported low-carbon hydrogen would be adopted. On the other hand, it is also relevant to mention that, while the surveyed literature carried out high-level analyses, in the case of the domestic production study (RHyCEET) the cost information came from a market survey involving mature projects in the Netherlands, some of which are currently in construction or close to FID. As such, the domestic production data could be considered to have a higher degree of certainty. Moreover, the RHyCEET study included a considerable cost (approx. € 2/kgH_2) for the costs of connecting electrolyser projects to the power grid, which is reflective of the current Dutch situation regarding electricity grid tariff structures, and which might be different in other parts of the world.

That being said, it is also likely that the costs were presented by the surveyed parties in RHyCEET were related to the most pessimistic case of each. In this sense, the level of optimism and assumptions from the studies regarding domestic and imported hydrogen studies can vary significantly, both among the gathered input and between the market survey and the surveyed literature.

Another point to note is that most hydrogen import studies coincided in the ranking of cost contributions i.e. production > export > shipping > import, with the notable exception of NH_3 where shipping is considered to contribute the least to the LCOH. The case of ammonia makes sense because, of the three commodities, it is the only one being shipped in important quantities worldwide, meaning that there is more knowledge about the shipping of ammonia than of the other carriers.

Regarding the variability of the results, we can note that there is a relatively large variance in the hydrogen production costs in the cases of liquid hydrogen and LOHC. This can be explained by the wide array of exporting countries envisioned in the surveyed literature. The exporting locations include North and South America, the Middle East, North Africa, Australia, and Northern and Southern Europe. Differences in the renewable energy potential of each country (e.g. wind speed and solar irradiance), perceived capital risk (i.e. differences in the assumed WACC), differences in the assumed energy mix (solar, wind, or a mixture), and even differences in the assumed fully installed cost of electrolysers, can lead to a wide variety of hydrogen production costs in different countries.

There is also a significant variance in the costs of the rest of the value chain of the different hydrogen carriers. This can be explained by the current status of each technology: some technologies, such as ammonia production and storage, are well-known assets and this can be reflected by a relatively small bandwidth in the contribution of export costs to the total LCOH. In contrast, the current state of liquid hydrogen and LCOH technologies explains the relatively wider error bars in the respective carriers' export costs.

Finally, we can also note that overall, the import costs contribute between 10% and 20% to the total LCOH, where liquid hydrogen was found to be the lowest and LCOH the highest (and ammonia in the middle at around 15%), but neither exceeded 20% of the total LCOH. This means that import costs are not the most critical cost bottleneck when it comes to developing international hydrogen supply chains. As a result, it can be concluded that government support in the form of e.g. CAPEX or OPEX subsidies on the operation of hydrogen import terminals, may not be as impactful in decreasing the total LCOH as other forms of support that target either hydrogen production (which is the highest contributor at around 50% of the total LCOH) or the whole supply chain.

4 Expected revenue models for low-carbon hydrogen carrier import terminals

In order to understand the expected (or potential) revenue models of low-carbon hydrogen carrier import terminals, we need to understand the different types of import terminals and their respective revenue models. Even though LNG and hydrogen are considerably different energy carriers and are at a totally different phase of development in their respective market, we can learn from how LNG terminals were developed in The Netherlands and in other parts of the world.

4.1 Current revenue models for LNG import terminals worldwide

There are different types of LNG import terminals in terms of what services they offer to a customer:

Captive import terminals. They provide services to a single company i.e. they are not open to third party access. The owner of a captive import terminal is likely to also own the LNG that is being imported, and use it for his own purposes, meaning that their 'customer' is the same company (although another legal entity). An example is the Futtsu LNG Terminal in Chiba, Japan[22].

Merchant import terminals. These import terminals sell imported LNG to clients. There are two types of merchant terminals:

- **Integrated Terminals**. They are the ones that sell their own gas production. An example is the South Hook LNG Terminal in the UK[23].
- **Bundled Services Terminals**. These are the ones that sell gas but do not sell (only) their gas production. An example is the Montego Bay LNG terminal in Jamaica[24].

Tolling import terminals (Unbundled Service Terminals). These import terminals provide LNG import services to clients. Tolling terminals do not own nor sell the LNG itself; their main business model is selling the LNG import services[25]. Examples of this are the GATE Terminal in Rotterdam, and the EemsEnergyTerminal in Eemshaven. Tolling terminals are the only

[22] Shipnext. Ports. Futtsu, Japan. Accessed on 02-12-2025. https://shipnext.com/port/futtsu-jpfts-jpn
[23] South Hook Gas. Who We Are. Accessed on 02-12-2025. https://www.southhookgas.com/about-us/
[24] Offshore Energy.biz. US LNG major buying compatriot's Jamaican assets for $1.05B in pursuit of downstream growth. Accessed on 02-12-2025. https://www.offshore-energy.biz/us-lng-major-buying-compatriots-jamaican-assets-for-1-05b-in-pursuit-of-downstream-growth/
[25] Alaska Natural Gas Transportation Projects. Tolling model a new option for LNG plant ownership. https://www.arlis.org/docs/vol1/AlaskaGas/Paper/Paper_OFC_2013_TollingModel_A_NewOptionForLNG.pdf

kind of LNG import terminals in operation in the Netherlands. These type of terminals naturally align with third-party access rule from the EU gas market legislation, supports the EU goal of a liquid, competitive gas market and therefore are the most dominant type of LNG-terminals in the EU.

The revenue model of an LNG import terminal varies per type of terminal. **Table 4-1** gives a high-level overview of the revenue models of the aforementioned types of LNG import terminals.

Table 4-1. Overview of the revenue models for different types of LNG import terminals.

	Captive Terminals	Merchant Terminals	Tolling Terminals
Main client-facing revenue stream	None (gas is consumed by the same company)	Sale of gas	Tolling fees for the use of the terminal
Import of only own gas or also third-party gas	Only own gas	Integrated terminals: only sell own gas Bundled services terminals: also sell third party gas	Not applicable (do not own the gas)
Main cost strategy	Cost recovery	Price arbitrage	Recovery of investment and operating costs + profit margin
Main revenue model	For private terminal owners, the revenue model is 'Transfer Pricing'. For public terminal owners, the revenue model is 'Allowed Revenue'.	For private terminal owners, the revenue model is 'Price Arbitrage'. For public terminal owners, the revenue model is 'Allowed Revenue'.	"Take-or-pay" tolling fees i.e. contracts for capacity reservation + fees for the handling of the LNG

4.2 Considerations regarding revenue models of low-carbon hydrogen import terminals

In the case of low-carbon hydrogen carrier terminals (including LH_2, NH_3, and LOHC), the (expected) revenue models could be based on the existing structure of LNG import terminals, which as discussed above, are a function of the type of terminal (captive, merchant, tolling). Furthermore, due to the fact that there can be a difference between import terminals based on physical hydrogen reconversion (e.g. LH_2) and chemical hydrogen reconversion (e.g. NH_3 and LOHC), it is likely that the storage and the reconversion part of the import terminals are 'split' i.e. they have different ownership, due to reasons including:

- Due to the proprietary nature of e.g. the catalysts and the processes for chemical hydrogen reconversion[26], it may be likely for a chemical hydrogen reconversion plant

[26] Cf. Thyssenkrupp Uhde. Ammonia cracking at scale. Accessed on 03-12-2025. https://www.thyssenkrupp-uhde.com/en/ammonia-cracking

to consider the chemical reconversion part of the terminal commercially sensitive, with respect to e.g. the storage part of the terminal.

- Existing storage infrastructure in ports could be reused/repurposed[27] to store hydrogen carriers. As such, existing storage operators could either provide services or have joint ventures with an entity intending to build a hydrogen reconversion plant. As such, a low-carbon hydrogen carrier import terminal could be (partially) based on existing infrastructure, or as an expansion of existing storage operations in ports.

As for the potential revenue models for low-carbon hydrogen carrier import terminals, in theory they could be divided into three main groups:

1. **Captive import terminals** will likely sell a hydrogen derivative (e.g. an e-fuel) or a product that incorporates the use of the hydrogen (e.g. green steel), but not the hydrogen itself.

2. **Merchant import terminals**, in particular integrated and bundled services terminals, will likely own the hydrogen and sell hydrogen to clients.

3. **Tolling terminals** will not likely own the hydrogen or sell the hydrogen, and their main revenue model will likely be based on selling terminal services including unloading, storage, and hydrogen reconversion.

In the Netherlands (and the EU), it is expected that tolling terminals will dominate the hydrogen import terminals landscape given the EU decarbonisation package rules regarding open, transparent and non-discriminatory third-party access (TPA). That being said, there could be different exemptions applicable to import infrastructure:

- **Captive terminals**. Import infrastructure that is not connected to the public grid (e.g. the Dutch hydrogen backbone) and is either used for own consumption or sold to customers within a geographically confined hydrogen network (e.g. in an industrial park), is not required to grant TPA, according to the Hydrogen and Decarbonised Gas Market Package Articles 2(8) and 52, respectively for own use and confined networks. After discussing with Dutch regulators, they noted that terminals can be coupled to geographically confined networks, they can do so only under the condition that they also are connected to a regulated network (e.g. a hydrogen backbone) where the TPA requirement is still valid. As such, they mentioned that captive terminals are not relevant for NL/EU case. Furthermore, captive terminals that do not convert the carrier to hydrogen but use it directly, fall out of the scope of the TPA requirements.

- **Merchant terminals**. Import infrastructure, including hydrogen terminals, may be granted an exemption from TPA for a set period, if they comply to conditions subject to the EC Regulation 2024/1789 Article 78, on grounds including whether the terminal would enhance security of supply, it contributes to the decarbonisation targets, the level of risk is high otherwise, it is owned by a different legal entity than a

[27] Cf. TNO (2025). Hergebruik van LNG-infrastructuur in Nederland. Report number TNO 2025 R10437_V1. https://open.overheid.nl/documenten/9ea3a5d9-4a0f-4df8-80ba-6a77b0531b2c/file

network operator, users pay for the terminal use, and the exemption is not detrimental to competition in the market[28] [29].

- **Tolling terminals**. It is important to note that both the GATE Terminal (both the current facility and the planned extension) and the EemsEnergyTerminal have been granted an exemption under these rules, where the caveat is that "unused capacity must be offered to the market and all potential users must be given the opportunity to express their interest before the capacity is allocated". After discussions with industry, it became clear that one of the agreements in this exemption is that the tolling model is retained. Dutch regulators noted that exemptions are typically not granted for TPA, but on the regulated tariff instead.

4.3 Additional revenue options

Next to the aforementioned revenue models for LNG terminals (energy sale or tolling), the operation of import terminals may allow other additional revenue models. Examples of further revenue options could include:

- **Grid service provider**. A terminal can leverage its storage capacity in order to provide grid services e.g. to a hydrogen network operator.
- **Valorisation of residual energy ("hot energy" or "cold energy")**. Import terminals would likely have a release of either "cold energy" or "hot energy", which could be valorised.

4.3.1 Import terminals as hydrogen network service providers

One of the main differences between natural gas pipelines and hydrogen pipelines, is related to linepack. Linepack is defined as the inherent volume of energy stored in a pipeline in the form of compressed gas. Linepack is important in the context of gas network operations because it allows a higher level of flexibility when connecting different sources and off takers of gas in a network.

Early estimations suggest that hydrogen pipelines will likely have a lower level of linepack than natural gas due to its inherently lower volumetric energy density (~67% less) than natural gas. For example, it has been estimated for a UK pipeline network that it could lose more than 70% of its linepack capacity if the pipeline system carried hydrogen instead of natural gas, as shown in **Figure 4-1**.

[28] EC. Access to infrastructure, exemptions and derogations. Accessed on 11-02-2026. https://energy.ec.europa.eu/topics/markets-and-consumers/wholesale-energy-market/access-infrastructure-exemptions-and-derogations_en

[29] EUR-Lex. Regulation (EU) 2024/1789 of the European Parliament and of the Council of 13 June 2024 on the internal markets for renewable gas, natural gas and hydrogen, amending Regulations (EU) No 1227/2011, (EU) 2017/1938, (EU) 2019/942 and (EU) 2022/869 and Decision (EU) 2017/684 and repealing Regulation (EC) No 715/2009 (recast) (Text with EEA relevance). https://eur-lex.europa.eu/eli/reg/2024/1789/oj/eng

	Pressure (barg)		Velocity (m/s)		Linepack	
	Minimum	Maximum	Minimum	Maximum	Volume (msm^3)	Energy (GWhr)
S01 – NG System	**46**	**66.9**	**-1.12**	**8.44**	**104.10**	**1144.3**
S02 – 2% H2	45.9	66.9	-1.11	8.55	105.50	1144.30
% Change to NG	*-0.22%*	*0.00%*	*-0.89%*	*1.30%*	*1.34%*	*<1%*
S03 – 20% H2	46.9	67.5	-1.38	9.64	100.00	947.40
% Change to NG	2.0%	0.9%	23.2%	14.2%	-3.9%	-17.2%
S04 – 100% H2	47.1	69.5	-4.21	27.9	90.10	302.90
% Change to NG	2.4%	3.9%	275.9%	230.0%	-13.4%	-73.5%

Figure 4-1. Calculated change in linepack capacity for a UK pipeline network, with natural gas (NG), natural gas-hydrogen blends, and pure hydrogen transport[30].

This reduction in linepack capacity could mean, among other things, that external hydrogen storage (e.g. in the form of underground storage but also from import terminal storage of hydrogen carriers) would be needed to operate a hydrogen pipeline network.

The ability of an import terminal to provide grid services (e.g. hydrogen storage) would depend on factors including the business model of the import terminal:

- **Merchant terminals** (integrated or bundled) could provide grid services depending on whether the grid service revenues are more attractive than the sale of hydrogen gas. One of the main questions is whether they would use their own (or the third party) gas for providing network services, or if the network operator would be responsible for procuring the gas.

- **Tolling terminals** may be (theoretically speaking) better positioned to provide grid services. They could, for example, sell capacity reservation to a network operator (in the same way as battery storage operators provide capacity reservation to electricity network operators), although this would mean that the network operator would be responsible for procuring the hydrogen (carrier) to be stored.

Another point to consider is whether the envisioned grid services would be “one-way” i.e. reconverting a hydrogen carrier and injecting hydrogen gas on demand to the grid, or “two-way” i.e. also including removing hydrogen from the grid and converting it to a hydrogen carrier, regardless of the type of terminal. In the latter case, it would be important to consider whether it is advantageous for the import terminal to also have access to hydrogen carrier production facilities (either own facilities or in collaboration with another party) in order to provide both injection and removal services.

4.3.2 Valorisation of hot and cold energy

Due to the nature of the import terminal operations, it is likely that excess heat or cold is available and can be used by other processes or parties.

Cold energy would be released during the physical vaporisation of LNG and LH_2 due to their respective temperatures (-162°C and -253°C, respectively), but also in the case of vaporisation of refrigerated NH_3 (-33°C). Cold energy is not expected in LOHC because they are stored as liquids at room temperature. This cold energy could be used in processes that

[30] Rosen (2024). Linepack flexibility. Hydrogen and hydrogen blends. Work package 3 report. Project number 17439. https://smarter.energynetworks.org/projects/nia_nggt0203/

require cooling e.g. refrigeration processes, cryogenic distillation and CO_2 liquefaction. **Figure 4-2** shows an example of the valorisation of the cold energy from an import terminal.

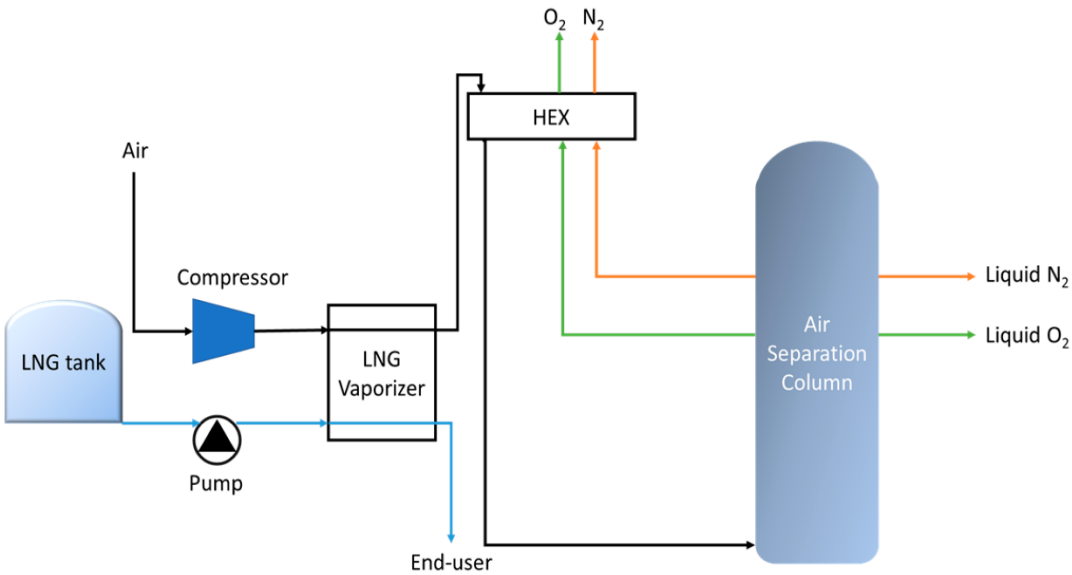

Figure 4-2. Example of cold energy utilisation in an LNG import terminal for air separation[31].

In the case of cold energy this could be more significant in the case of LH_2 than the current case of LNG and refrigerated NH_3, based on the total amount of energy stored (i.e. the "total enthalpy") in the respective carriers (LNG, LH_2, and refrigerated NH_3) as well as on the maximum "usefulness" of the energy stored (i.e. the "total exergy"). The degree of usefulness of the energy, in the case of import terminals, is related to the storage temperature of each energy carrier. The rule of thumb is that the further away the storage temperature is from ambient conditions, the higher the degree of "usefulness" of the recoverable energy. **Table 4-2** illustrates an example calculation of the total enthalpy and exergy of different carriers.

[31] Noor Akashah, M. H., Rozali, N. E. M., Mahadzir, S., & Liew, P. Y. (2023). Utilization of cold energy from LNG regasification process: A review of current trends. Processes, 11(2), 517. https://doi.org/10.3390/pr11020517

Table 4-2. Estimated total and recoverable cold energy from physical regasification of LNG, LH_2, and refrigerated NH_3. Note that this ignores non-linear thermodynamic effects including the dependence of the specific heat capacity changes with respect to temperature and the difference between ortho- and para-hydrogen[32].

Imported energy commodity	LNG	LH_2	Refrigerated NH_3
Ambient temperature (for the energy estimation)	25ºC		
Latent heat of vaporisation [kJ/kg]	510	446	1.369
Specific heat capacity [kJ/kg K]	2,2	14,3	2,1
Temperature at storage conditions	-162ºC	-253ºC	-33ºC
Estimated total enthalpy [kWh/kg LNG or H_2] (in brackets the units are [kWh/kWh_LHV])	0,257 (0,018)	1,11 (0,033)	0,414 (0,070)
Estimated total exergy i.e. useful energy [kWh/kg LNG or H_2] (in brackets the units are [kWh/kWh_LHV])	0,302 (0,022)	3,09 (0,093)	0,096 (0,016)

Heat would be released in the case of chemical hydrogen reconversion including NH_3 cracking and LOHC dehydrogenation. In this case, an import terminal could valorise the residual heat by capturing it and selling it to (neighbouring) clients. In the case of heat generation, this may be less significant because it is likely that the chemical hydrogen reconversion processes, would already incorporate heat recovery equipment (e.g. heat exchangers between outlet and inlet), which may be more effective at minimising the total OPEX of the plant, than selling it as residual heat. **Figure 4-3** shows an example of a chemical hydrogen reconversion plant from NH_3 i.e. an ammonia cracking facility, illustrating the heat exchangers that recover the heat from the process.

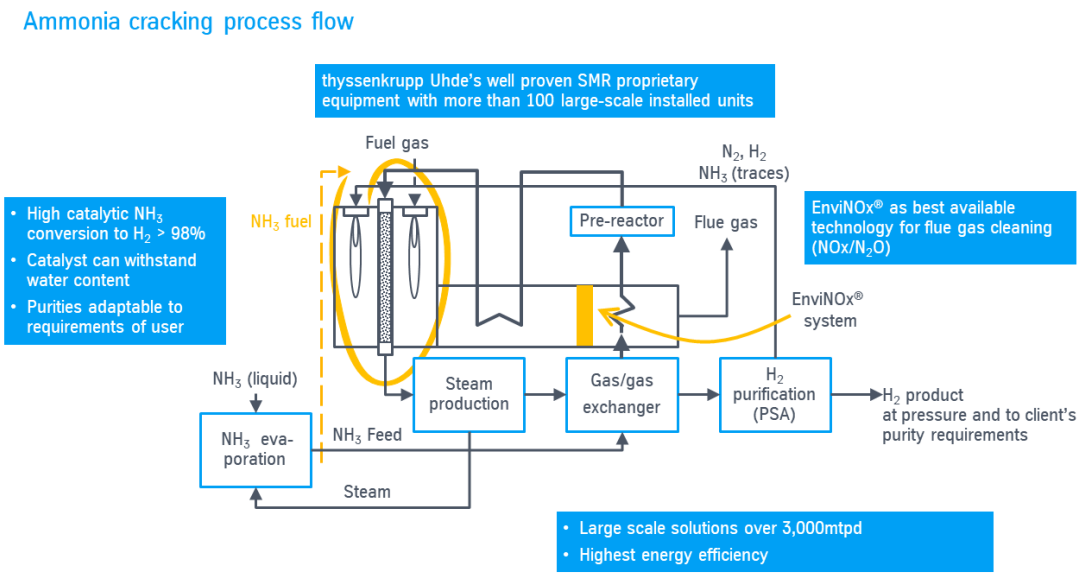

Figure 4-3. Schematic of an ammonia cracking process from Thyssenkrupp Uhde, showcasing a "gas/gas exchanger" for heat recovery[33].

[32] Choi et al. (2004). Liquid hydrogen properties. Korea Atomic Energy Research Institute. https://inis.iaea.org/records/zwj9z-m9g85
[33] See Thyssenkrupp Uhde.

5 Current market and transition inefficacies around hydrogen import

Until the time of writing of this document there have been no installed hydrogen import terminals nor have there been any FIDs for such facilities in the Netherlands. This sections highlights and discusses some potential reasons why this is the case.

5.1 Impact of offtake risk on cost of capital

In the case a terminal wants to receive project finance i.e. where a financier looks at the generated cash flows from the terminal instead of the company's balance sheet to guarantee the investment, a lender may not be willing to give a long-term loan (e.g. 15-20 years) unless there are offtake agreements (of either the hydrogen or the tolling services) in place for the same duration. A risk could then be that off takers may not be willing to sign long-term commitments and prefer shorter-term commitments (e.g. 1-10 years maximum).

This could lead to an "offtake gap" where there is no guarantee that the import terminal would generate cash flow. In this case, financiers would either 1) avoid investing altogether, or 2) ask for a "premium" e.g. a 15% interest rate instead of a 5% if there were enough off taker guarantees. In this case, the solution might not be a financial derisking support (e.g. CAPEX or OPEX support to either the terminal owner or the potential off-takers) because the risk is only fully mitigated if off-takers actually commit to off-taking hydrogen or tolling services from the import terminal. To give an example, a loan of 5% interest for a 20-year project, would mean that at the end of the project roughly 38% of all the loan repayment from the cash flow would go to paying interest only. In contrast, a 15% loan for the same period would mean that 69% of all the loan repayment is going to paying interest only. **Figure 5-1** shows an indication of the impact of high interest rates (i.e. interest rate plus premiums due to risk) on the LCOH of a generic hydrogen project, where the interest rate increase from 5% to 15% adds over €3/kgH_2, highlighting the impact of premiums caused by increased risk perception from the financier perspective.

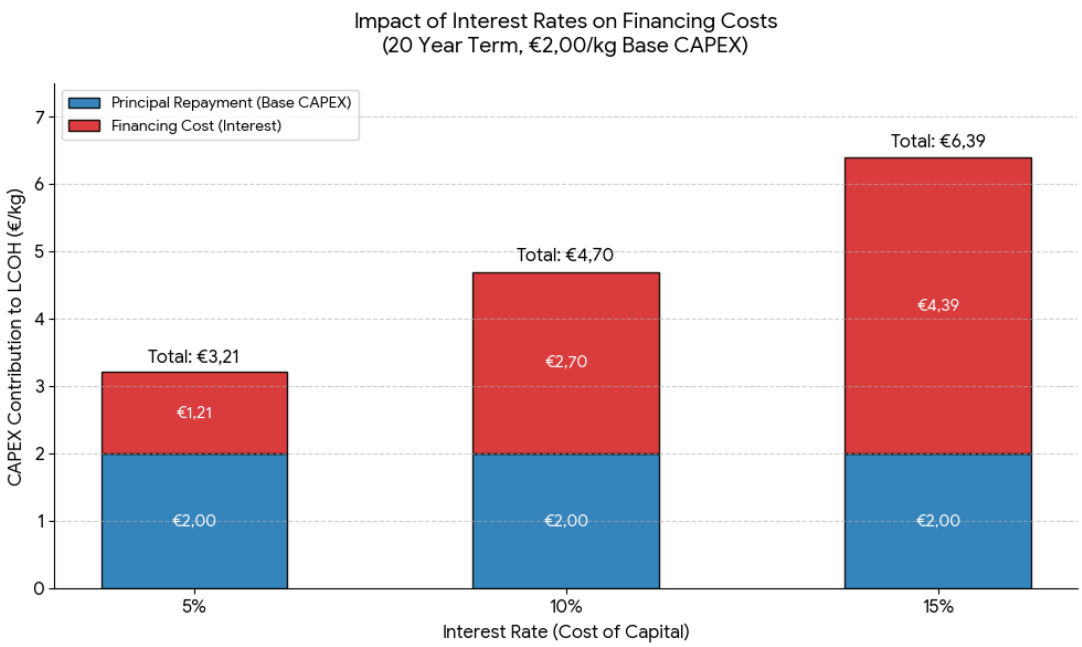

Figure 5-1. Visualisation of the impact of different interest rates (5%, 10%, and 15%) on the LCOH of a generic hydrogen project where the CAPEX is €2/kgH_2.

It is important to note that CAPEX support also decreases interest costs by decreasing the height of the loan. CAPEX support possibly a smaller influence than the interest rate, but it definitely has an effect.

Moreover, lack of demand creation is often cited as the main issue that prevents many FIDs to be taken, both in domestic hydrogen production and in international supply chain projects. This comes due to the existing situation that the willingness to pay for low-carbon hydrogen is lower than the total supply chain costs of green hydrogen, including the import terminal. This risk could impact merchant terminals more directly than tolling terminals because merchant terminals sell the molecule instead of intermediary services in the supply chain. Theoretically speaking, this could be solved through financial derisking actions e.g. price differential support for the unprofitable gap (i.e. the “Green Premium”) between willingness to pay and costs, but the main question is to what extent such subsidies could be guaranteed for the complete duration of the project.

5.2 Current financial support asymmetry: imports vs domestic hydrogen production

A distinct financial support asymmetry is emerging between domestic hydrogen production and import infrastructure, potentially distorting the competitive landscape. While recent Dutch and EU policy frameworks provide CAPEX/OPEX support for domestic electrolysers, for example the EHB and the IPCEI subsidies, as well as the Dutch OWE[34] subsidies, comparable (i.e. bespoke) financial instruments for hydrogen import terminals are noticeably absent besides support in the framework of H2Global, which is classified as a public demand aggregator, which will be discussed below. It is also important to note that, as part of the

[34] RVO. Subsidieregeling grootschalige productie volledig hernieuwbare waterstof via elektrolyse (OWE). Accessed on 17-12-2025. https://www.rvo.nl/subsidies-financiering/owe

IPCEI, support was also possible for stimulation of import. From the three original projects proposed within this framework, only one project remains (Air Products).

Furthermore, the Hydrogen and Decarbonised Gas Market Package (EC Directive 2024/1788)[35] designates import terminals as essential infrastructure, mandating negotiated Third-Party Access (TPA). According to Dutch regulators, storage hydrogen carriers that would be made available to other markets than hydrogen e.g. ammonia storage to be made available as direct product instead of reconverted to hydrogen, will not be required to have TPA. As such, this “extra” storage capacity would not fall under the TPA regime.

TPA requirements could create a situation where the optimisation of storage and reconversion units cannot be done based on supply and demand, but should also be regulated, although we acknowledge that an optimal situation could be developed in discussions between (prospective) terminal operators and customers (e.g. off takers of import capacity).

After discussing with Dutch regulators, from a regulatory standpoint electrolysers are treated like production facilities and import/pipelines/storage as infrastructure, because the latter are essential infrastructure and can act as bottleneck to distribute the flows of hydrogen. This means that they are susceptible to natural monopolies, therefore it is needed to regulate such activities. In the case of hydrogen production, there can be many more private actors. Regulation of import infrastructure is exactly what is needed to avoid the monopoly situation. As such, this regulatory asymmetry is seen as by design instead of an oversight.

5.3 CAPEX and OPEX support in domestic and import value chains

As an example, subsidies from the EU have been offered to production projects, including the hydrogen-related IPCEI (Important Projects of Common European Interest) “Hy2Use”[36], which is an EU instrument that allows for a higher percentage of state aid (up to 100% of the funding gap) as long as they are proven to be of common European interest. Two of the projects funded under this scheme include Holland Hydrogen 1, led by Shell, and ELYGator, led by Air Liquide. While the amount is not exactly known, it is estimated that the projects were offered as subsidy 20-25% of the total CAPEX for the green hydrogen production facilities. Shell, for example, received a reported €150 million in subsidies, while the reported project cost is around €700 million[37]. Out of the seven projects that were awarded subsidy, only Shell’s Holland Hydrogen 1 took FID (Final Investment Decision) in 2023. In the case of Air Liquide, FID was taken in 2025 after being awarded extra subsidies on top of the Hy2Use IPCEI subsidy, totalling €340 million in subsidies for project estimated to cost upwards from €500 million, which corresponds to <68% of the total CAPEX of their facility.

Another example is the EHB (European Hydrogen Bank). The EHB is a subsidy mechanism started by the EU with the aim to provide aid to green hydrogen production projects in the

[35] EUR-Lex. Directive (EU) 2024/1788 of the European Parliament and of the Council of 13 June 2024 on common rules for the internal markets for renewable gas, natural gas and hydrogen, amending Directive (EU) 2023/1791 and repealing Directive 2009/73/EC (recast) (Text with EEA relevance). https://eur-lex.europa.eu/eli/dir/2024/1788/oj

[36] Clean Hydrogen Partnership. IPCEI Hydrogen. Hy2Use. TF! Infrastructure. Accessed on 12-12-2025. https://ipcei.observatory.clean-hydrogen.europa.eu/hy2use/tf1-infrastructure

[37] Blackridge Research & Consulting. Project profiles. Holland Hydrogen I: One of Europe’s Largest Green Hydrogen Projects. Accessed on 15-12-2025. https://www.blackridgeresearch.com/project-profiles/shell-holland-hydrogen-1-cost-contractors-latest-updates

form of OPEX support i.e. by giving a subsidy equal to the “unprofitable gap” of green hydrogen production projects, for a period of 10 years[38]. The EHB works in auctions i.e. projects submit their proposals and whoever has the lowest unprofitable gap, is awarded the subsidy. In the first auction (published in 2023), 7 projects were awarded subsidy, out of which 6 projects signed a Grant Agreement, and the subsidy intensity has been estimated to be between € 0,37 and € 0,48/kgH_2[39]. During the second auction of the EHB (which raised the ceiling of the auction to €4/kgH_2), 8 projects went ahead with the Grant Agreement Procedure[40].

One of the key features of domestic hydrogen production is that, due to the current early stage of large-scale electrolyser projects in Europe, such projects can be considerably CAPEX intensive, although recent studies have shown that variable OPEX (mainly the cost of electricity) is often an equal or even larger contributor to the LCOH[41]. As such, CAPEX subsidies can be seen as an instrument to support de-risking capital-intensive projects. In the case of OPEX subsidies, they can support the cash flow of project, which can lead to a higher bankability of brownfield and greenfield projects. However, in some cases for domestic production focussing on OPEX and CAPEX support scheme seems to be sufficient, but from recent experience it seems that it is already quite challenging for these projects. In this sense, it will most probably be much more challenging for import projects, as the supply chain is much more complex. As such, existing instruments designed for domestic production may not fully be able to de-risk import projects.

One of the key distinctions between production infrastructure and import terminals is that, as can be seen in **Figure 3-2** and **Figure 3-3**, the total percentage of the LCOH that can be attributed to the import part of the supply chain, is relatively small. As such, supporting the development of import infrastructure by means of CAPEX/OPEX subsidies may not lead to an effective incentive for the development of international supply chains. This can be the case because 1) the more CAPEX-intensive part of the investing is the production of hydrogen, and 2) this will take place abroad by definition. In this case, it would be important to consider alternative subsidy or support instruments that can be tailored to international supply chains in order to develop point-to-point hydrogen import at the early stages and transition to developing a liquid market in the future. While CAPEX and OPEX can be suitable instruments for domestic production, it may be the case that such support is needed in the exporting countries, leading to a need for coordinating different support mechanisms for different parts of international supply chains.

Finally, it is crucial to note that CAPEX support might well be needed for 'demonstration projects' to reduce risks. This could go hand in hand with other actions on the demand side.

[38] European Commission. European Hydrogen Bank. Accessed on 15-12-2025. https://energy.ec.europa.eu/topics/eus-energy-system/hydrogen/european-hydrogen-bank_en

[39] Hydrogen Insight. Winner of green hydrogen subsidies at pilot European Hydrogen Bank auction pulls out of process. Accessed on 15-12-2025. https://www.hydrogeninsight.com/production/winner-of-green-hydrogen-subsidies-at-pilot-european-hydrogen-bank-auction-pulls-out-of-process/2-1-1720968

[40] European Commission. IF24 Auction. Accessed on 15-12-2025. https://climate.ec.europa.eu/eu-action/eu-funding-climate-action/innovation-fund/calls-proposals/if24-auction_en#:~:text=Out%20of%20the%2015%20initially,provide%20the%20signed%20completion%20guarantee.

[41] TNO. Evaluation of the Levelised cost of hydrogen based on proposed electrolyser projects in the Netherlands. Report number TNO 2024 R10766. https://publications.tno.nl/publication/34642511/mzKCln/TNO-2024-R10766.pdf

5.4 Lack of coordination across the international value chain

Another market inefficacy in the international hydrogen value chain is the coordination across parties. For example, a party that may want to produce hydrogen in a country and export it, may not be able to take an FID because of the lack of import infrastructure, while the party willing to invest in import infrastructure may not take an FID because the export infrastructure is not certain either. This creates a ‘chicken-and-egg’ problem, which is well known in the hydrogen industry, and which cannot be solved unless there is a direct connection between the parties i.e. if they are able to take simultaneous FID or be backed by one or several parties willing to share the risk on both the export and the import side.

Even considering that an import terminal contributes to 10-20% of the total LCOH, which seems relatively low, the situation would not be the same for a terminal operator that solely develops the import infrastructure than a company that develops the whole supply chain, including hydrogen production in other countries, transport costs and import terminal.

6 Potential governmental actions to accelerate the development of low-carbon hydrogen carrier import terminals

The type of governmental action (including but not limited to demand or supply-related policy) that can be effective towards supporting the development of low-carbon hydrogen carrier import terminals, will be related to factors including:

- **Type of terminal**. The effectiveness of policies varies depending on whether the asset is a captive, merchant, or tolling terminal.
- **Risk and revenue models of the different stakeholders**. It is likely that different governmental actions or policies, will have a different effect on actors with different risk and revenue models.
- **Governmental targets.** Policy choice depends on the state's primary objective, whether that is meeting decarbonization quotas, attracting foreign direct investment (FDI), securing local supply, or establishing a strategic position in global trade.

In this section, some possible governmental actions will be analysed, based on either the current hydrogen market, or past experiences in the LNG market.

6.1 State-backed guarantees

A potential method for mitigating offtake risks (and therefore to decrease the risk-related premiums in project financing), is to provide a state-backed guarantee to cover the CAPEX of the import terminal i.e. to cover the upfront costs without a prior firm commitment from clients.

Recent examples of state-backed guarantees successfully applied in the context of energy import terminals include the case of the building of the EemsEnergyTerminal in Eemshaven. A letter to the Parliament of 26 April 2022, informed that the Dutch government provided a guarantee of €160 million (which represented 80% of the total investment required) for the construction of the FSRU for the EemsEnergyTerminal[42]. This was done as a response to the energy crisis at the time, which led to the need to deploy LNG import capacity on a (very) short notice.

[42] Overheid. Wijziging van de begrotingsstaat van het Ministerie van Financiën (IX) voor het jaar 2022 (Tweede incidentele suppletoire begroting inzake LNG-invoercapaciteit in de Eemshaven). A. Brief van de Minister van Financiën. Accessed on 09-12-2025. https://zoek.officielebekendmakingen.nl/kst-36087-A.html

By the time the decision to provide a guarantee was made, Gasunie had already entered a 5-year charter (TCP) agreement with EXMAR and had done so before any contracts were in place with off-takers of the EemsEnergyTerminal, which is a tolling terminal. Furthermore, the Dutch Government explicitly acknowledged that the guarantee would have no impact on the State's finances as long as it was not required, which would be the case if the EemsEnergyTerminal would be fully booked for an equal period as the current charter agreement i.e. the lease agreement with the FSRU owner (i.e. 5 years). As of September 2025, the EemsEnergyTerminal seems to be fully booked[43], and as of December 2025 the terminal has planned to prolong its LNG import capacity and, as such, has launched an Open Season to contract the (expected) new capacity[44]. This seems to indicate that the development of the EemsEnergyTerminal has been a success and that it is likely that the state-backed guarantee has not been triggered.

6.2 Demand creation via increased value of green hydrogen "multipliers"

An example of the price risk is the multipliers proposed to fulfil the RED III mandatory quotas in the Netherlands and Germany. In the case of the Netherlands, an initial proposal from the government in 2024 was to implement a correction factor of 0,4x[45] for refineries, meaning that the use of low-carbon hydrogen in the refining process for transport fuels would only count for 0,4 times the emissions reduction, in order to stimulate the direct use of low-carbon hydrogen in transport[46]. After reconsideration, the correction factor was adjusted in April 2025 to 1,0x[47]. Note that in 2026 the Dutch low-carbon admixing system is changing from the current one where the admixing is based on energy content (HBE, renewable fuel units) to the future one where the admixing is based on emissions reduction (ERE, emission reduction units)[48]. This change could have an impact on the potential benefits for parties involved, both obligated parties and potential newcomers to the market).

In the case of Germany, the 37th Federal Immision Control Act (BImSchG) has established a multiplier of 3x for the direct use of low-carbon hydrogen in the transport sector in Germany[49] [50], which is considerably higher than any of the proposed multipliers or correction factors in the Netherlands. In this particular example, a potential low-carbon hydrogen importer, might

[43] LNGPrime. Dutch Eemshaven LNG terminals hits new record. Accessed 09-12-2025. https://lngprime.com/europe/dutch-eemshaven-lng-terminal-hits-new-record/162349/.
[44] EemsEnergyTerminal. Open Season. Accessed on 09-12-2025. https://www.eemsenergyterminal.nl/en/commercial/open-season
[45] Nationaal Waterstof Programma. Voorstel correctiefactor Hernieuwbare waterstof in raffinaderijen bekend. Accessed on 15-01-2026. https://www.nationaalwaterstofprogramma.nl/actueel/nieuws/2936310.aspx#:~:text=26%2D11%2D2024,Kamerbrief%20van%2030%20oktober%202024.
[46] Argus. Netherlands publishes RED III biofuels draft. Accessed 09-12-2025. https://www.argusmedia.com/en/news-and-insights/latest-market-news/2702749-netherlands-publishes-red-iii-biofuels-draft
[47] Nationaal Waterstof Programma. Correctiefactor herniewubare waterstof in raffinaderijen bekend. Accessed on 15-01-2026. https://www.nationaalwaterstofprogramma.nl/actueel/nieuws/3041905.aspx#:~:text=25%2D04%2D2025,een%20factor%20van%200%2C4.
[48] Green Choice Integrated. Van HBE naar ERE. Wat verandert er? Accessed on 21-01-2026. https://greenchoiceintegrated.nl/kennisbank/van-hbe-naar-ere-wat-verandert-er/
[49] Chatham Partners. Green Hydrogen – New rules for the transport sector. Accessed on 09-12-2025. https://chatham.partners/insights/green-hydrogen-new-rules-for-the-german-market/.
[50] H_2 International. GHG quota trading for green hydrogen. Accessed on 09-12-2025. https://www.H_2-international.com/companies/37th-bimschv-enables-extra-revenue-renewable-fuels-ghg-quota-trading-green-hydrogen.

be more enticed to import hydrogen and sell it in the German transport sector because it is more likely that there will be a higher willingness to pay due to the 3x multiplier (which is expected to last 10 years until it phases down to 1x), with respect to the 1,5x in the Dutch transport sector or even if we assume that the Netherlands enacts the 0,4x multiplier in Dutch refineries.

This can lead to a situation where even without any financial derisking action, the demand creation action (i.e. the 3x multiplier) seems to provide more certainty and could therefore be more effectively mitigating the price risk instead of e.g. providing financial derisking such as CAPEX or OPEX support for terminal operators. From indicative estimates, the 3x multiplier for direct hydrogen use in the German transport sector can lead to a generated revenue of around €4/kgH_2, which is almost ten times higher than the OPEX support provided by the European Hydrogen Bank (see discussion in the next section). **Table 6-1** shows an indicative calculation of the revenue generated by the 3x multiplier.

Table 6-1. Indicative revenue generated by green hydrogen using the recent German THG (*Treibhausgasminderungsquote*, greenhouse gas emissions quotas) prices "THG-Other" and the emissions reduction of green hydrogen used directly in the transport sector.

Hydrogen emissions reduction with the 3x multiplier (German transport industry as per the BImSchG)	Price of the THG quotas ("THG-Other" in April 2025[51])	Revenue generated by the 3x multiplier = Emissions reduction * price of the quotas
27,9 kg CO2/kgH_2	€0,14/kg CO2	27,9 * €0,14 = €3,91/kgH_2

6.3 Direct state involvement in loan and project finance/development

While there is no experience yet regarding large-scale low-carbon hydrogen imports, it is important to look back into history and understand the development of the international LNG market.

One of the main players that started the international LNG trade is Japan. During the post-war era, Japan experienced a significant tailwind in its economy, which combined with its lack of energy resources, made it depend on increasing amounts of foreign imports of energy carriers. Between the 1960's and the 1990's, financially secure Japanese electricity and gas utilities (which are private but regulated entities) offered long-term contracts for purchases, and the Japanese government offered favourable financing via loans and export credits[52]. As examples, in 1984 the Qatargas Liquefied Natural Gas Company (QG1) was established as a joint venture between Qatari, American, French, and Japanese entities[53].
Furthermore, in 1992 Japanese utilities were the first to sign a multi-party SPA (Sales and Purchase Agreement) with Qatargas (the Qatari LNG producer)[54]. The Japanese approach to

[51] S&P Global. German THG, biomethane diverge on saturated downstream. Accessed on 16-12-2025. https://www.spglobal.com/energy/en/news-research/latest-news/natural-gas/042425-german-thg-biomethane-diverge-on-saturated-downstream
[52] Hashimoto et al. (2004). Liquefied Natural Gas from Qatar: the Qatargas project. http://large.stanford.edu/publications/coal/references/baker/studies/gas/docs/GAS_QatarGasProject.pdf
[53] LNGPrime. Qatar Petroleum says to become sole owner of Qatargas 1. Accessed on 15-12-2025. https://lngprime.com/middle-east/qatar-petroleum-says-to-become-sole-owner-of-qatargas-1/16109/.
[54] Offshore energy.biz. Chubu Electric, Qatargas Sign LNG Purchase Agreement (Japan). Accessed on 15-12-2025. https://www.offshore-energy.biz/chubu-electric-qatar-sign-lng-purchase-agreement-japan/.

financing LNG projects followed a 'Japan Inc.' model: a coordinated system involving purchase commitments, public financing, and trading house facilitation. This model consists of the initiative of Japan's Sogo Shosha (general trading companies) with the support of Japanese governmental financial agencies and a purchase commitment from Japanese utilities[55]. It seems that there were always three key players from the Japanese side: Japanese users who were able to sign long-term commitments, government agencies to support the investment, and trading companies that organised the project.

There are three main types of ventures and project structures involving Japanese companies. The first kind involves a single sponsor providing a loan, either with bilateral governmental risk sharing (i.e. each sponsor/government carries the risk in proportion to the loan amount) or even providing loans to other countries, who in turn provide a state-backed guarantee. In the second structure, a Japanese special purpose vehicle (a subsidiary company formed for a single, strictly defined activity) e.g. organised by the Japanese Export-Import bank (then called J-EXIM now called Japan Bank for International Cooperation, JBIC), provide a loan to a party. In this loan, the guarantors (i.e. the shareholders of the special purpose vehicle) are Japanese electric and gas utilities. The investments of the Japanese utilities were then backed by the Japanese Ministry of Trade and Industry. The third form is via joint ventures, where the J-EXIM provided project finance (where the loan is guaranteed by the revenue generated by the project) instead of a loan backed by the state or the balance sheet of the receiving party[56].

Nowadays, Japan is the world's second-largest LNG importer (behind China), importing roughly 16% of the world's LNG. **Figure 6-1** showcases the collaboration between Japanese actors in foreign (infrastructure) investment projects.

[55] IAEA. The Japanese approach to financing LNG projects. https://inis.iaea.org/records/ktbzj-eed24
[56] See Hashimoto et al. (2004).

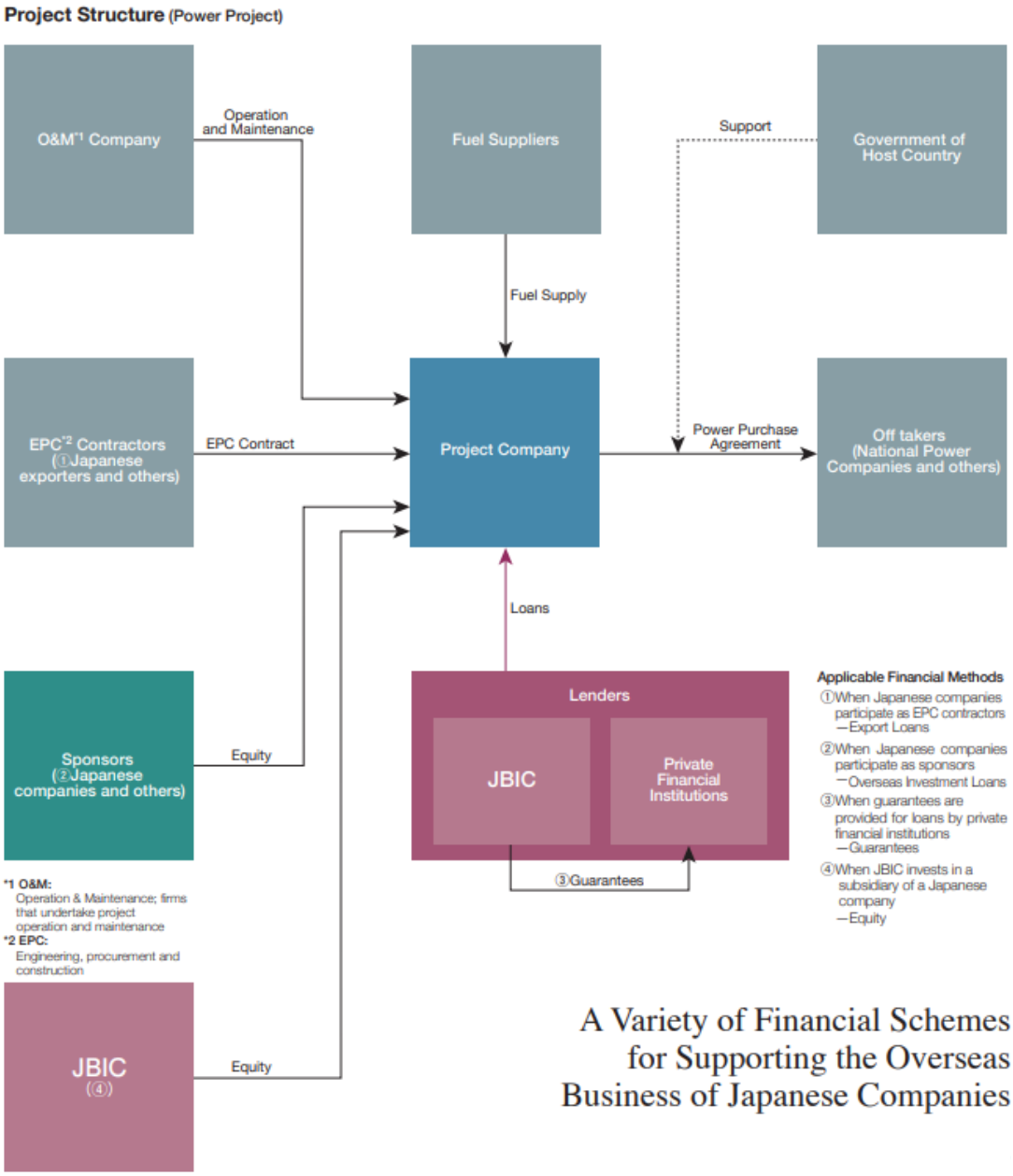

Figure 6-1. Overview of the Japanese financial scheme model for overseas business of Japanese companies[57].

[57] Adapted from: JBIC Project Finance Initiatives. https://www.jbic.go.jp/en/information/image/000001716.pdf

6.4 Public or public-private demand aggregators

Another effective mechanism for risk management in energy commodities, is the use of public demand aggregators. A public demand aggregator is a state-backed entity that pools fragmented purchasing needs from multiple private or public actors into a single large-scale demand volume to secure strategic supply, reduce counterparty risk, and lower costs through economies of scale. Reasons to include public demand aggregators include to fix a market failure e.g. to break the "chicken-and-egg" problem in energy infrastructure investment, to leverage the credit rating of the state e.g. so that projects do not only depend on project finance or direct loans to companies with lower credit rating, and to consolidate (e.g. "pool") production or demand volumes.

One example we can name is KOGAS, the South Korean Gas Corporation. KOGAS was established in August 1983, and its main business is building terminals and a gas supply pipeline network, importing LNG, regasifying it at the terminals, and supplying it stably to local gas companies and power plants[58]. Despite KOGAS starting as a monopoly i.e. importing 100% of all the LNG of South Korea when it was founded, the South Korean government liberalised the LNG market in 2005, enabling private LNG imports to South Korea[59]. Still, KOGAS is considered the largest single LNG importing entity in the world[60].

Another example from a different market is SECI, the Solar Energy Corporation of India. SECI is a government-designated nodal agency that acts as the primary aggregator for many Indian Government's schemes for development of various renewable energy segments, and it also undertakes its own projects e.g. via joint ventures[61]. Unlike the KOGAS model where KOGAS directly enters SPAs, SECI operates through tenders where it procures e.g. solar power from producers via PPAs and sells them to consumers via PSAs. This is done via an e-bidding procedure that can happen either at a Pan-India or a State-specific basis. The revenue model of SECI is the application of a trading margin to the sales of power to the off taker[62]. SECI can guarantee payments to energy producers because it is backed directly by the Government of India as well as by State governments, leading to a high credit worthiness and thus providing risk reduction to the solar power value chain[63]. Beyond solar power, SECI is also starting to operate in the green hydrogen and green ammonia business using the same model as for solar power. **Figure 6-2** shows a common Indian sale and purchase workflow of solar power where SECI is the intermediary.

[58] KOGAS. Introduction. Clean Energy Enterprise KOGAS. Accessed on 15-12-2025. https://www.kogas.or.kr/site/eng/1010100000000.
[59] Trade.gov. South Korea Liquid Natural Gas Market. Accessed on 15-12-2025. https://www.trade.gov/market-intelligence/south-korea-liquid-natural-gas-market.
[60] TotalEnergies. South Korea: TotalEnergies to supply 1 million tons per year of LNG to KOGAS for 10 years. Accessed on 15-12-2025. https://totalenergies.com/news/press-releases/south-korea-totalenergies-supply-1-million-tons-year-lng-kogas-10-years.
[61] SECI. Empowering sustainable growth with Renewable Energy. Accessed on 15-12-2025. https://www.seci.co.in/empowering-sustainable-growth-with-renewable-energy.
[62] MERCOM India. APTEL Upholds SECI's Trading Margin of ₹0.07/kWh for Solar and Hybrid Projects. Accessed on 15-12-2025. https://www.mercomindia.com/aptel-upholds-seci-trading-margin
[63] CEEW. How payment security mechanism works. Accessed on 15-12-2025. https://www.ceew.in/gfc/quick-reads/explains/how-payment-security-mechanism-works.

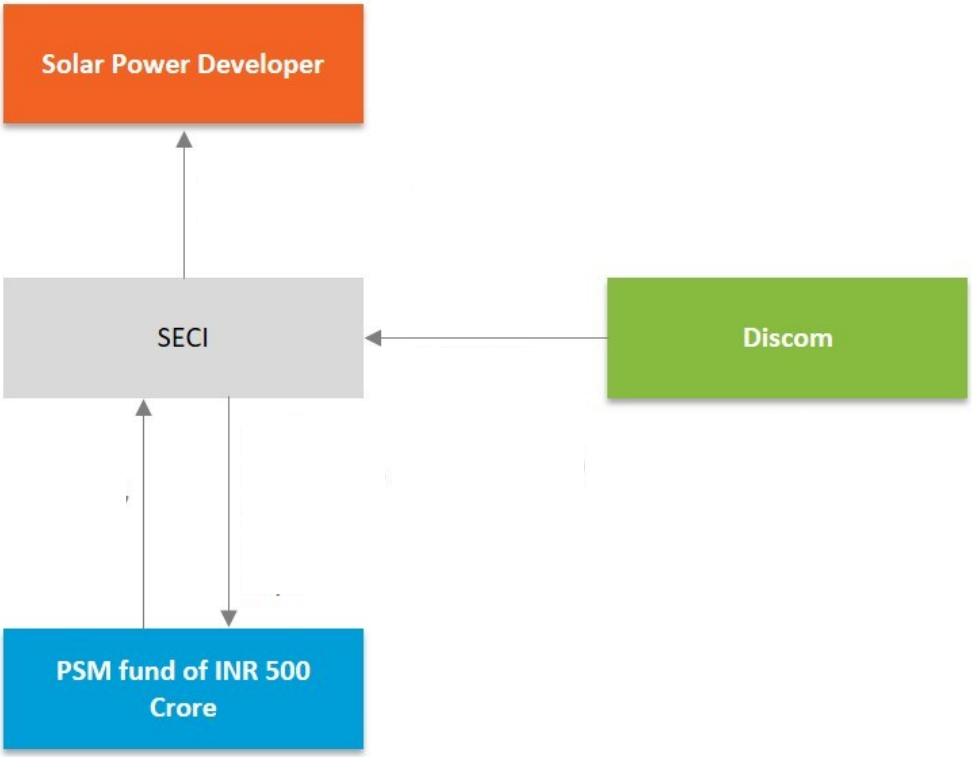

Figure 6-2. Overview of a typical arrangement between SECI as public demand aggregator (in this case of solar power), sellers (e.g. a solar power developer), buyers (e.g. discoms, energy distribution companies), and a PSM (payment security mechanism i.e. a state-backed buffer).

In the case of hydrogen, the H2Global Foundation has been established in order to create liquidity in the import of hydrogen to European markets, by combining public and private capital. In July 2024 they concluded their first Pilot Auction around import of green hydrogen via NH_3 to Europe. H2Global offered to the winner an HPA (Hydrogen Purchase Agreement) that involved a 6-year minimum guaranteed volume of renewable ammonia of 40.000 tons per year (~7.000-ton H_2/year) between 2028 and 2033, with optional offtake volumes. For comparison, 7.000-ton H_2/year represent approximately 0,4% of the total hydrogen consumption in the Netherlands and 4% of the total Dutch merchant hydrogen market. The winner of the auction, Fertiglobe, bid a price of € 1.000 per ton NH_3 (~€ 5,61 /kgH_2) but, as we discussed before, this value does not include the cost of a hydrogen import at a terminal including reconversion.

Note that there is a fundamental difference between the SECI model and the H2Global model. In the SECI model there are auctions between suppliers and off-takers, where the role of SECI is to guarantee the payment to the suppliers but SECI itself does not have any ownership of the traded commodity, meaning that there are only agreements if there are suppliers and off-takers participating in the auctions. In the case of H2Global (or at least the first auction), H2Global announced the winning supply bid of renewable ammonia but did not announce the off taker, which suggests that H2Global will take ownership of the molecule and, as such, take a larger price risk than SECI in their auction model.

7 Final remarks

This report provides technical, financial, and policy-related information in the topic of low-carbon hydrogen carrier import terminals. It is a multifaceted subject that requires careful examination from various angles. The nascent phase of low-carbon hydrogen international value chains means that import terminals are also in early stages of development. However, valuable conclusions can be drawn by comparing this emerging sector with the mature LNG import market.

Regarding the technical side, it is expected that hydrogen import terminals based on liquid carriers, including LH_2, NH_3, or LOHC in any of its variants (TOL, BT, or DBT), would contain similar layouts as LNG import terminals. Any of the aforementioned terminal types would require a berth and a jetty for tanker unloading, loading arms, storage, hydrogen reconversion, and send-out pumps/compressors. The primary difference among carriers lies in the maturity of their specific technologies, particularly regarding storage and the reconversion process

Regarding storage, it seems that LH_2 is the least advanced of the three. While the LH_2 containment temperature (-253°C) presents greater engineering challenges than LNG, the current lack of maturity is largely due to insufficient demand for scale-up. Consequently, rapid technological maturation in LH_2 storage is expected once market demand accelerates. NH_3 is already an internationally traded commodity, meaning that storage in import terminals is already a commercially mature endeavour. In the case of LOHCs, although they are less commercial as hydrogen carriers than LH_2, much of the storage infrastructure required is expected to be similar to the already commercially mature storage of oil and refined products. As such, it is also expected that LOHC storage can be easily matured.

About hydrogen reconversion, as a purely physical process requiring only heat addition, LH_2 regasification is conceptually similar to LNG regasification, suggesting a straightforward path to scale-up. In contrast, NH_3 and LOHC require chemical cracking or dehydrogenation. This implies a need to mature specific catalysts and reactors, likely resulting in higher operational complexity at the import terminal compared to LH_2 or LNG.

One of the main features of the modern LNG import terminal market, is the prevalence of floating terminals that can be deployed faster than onshore terminals and have a charter model i.e. where the terminal operator does not need a large up-front investment. If floating terminals were developed for hydrogen carriers, it would mean that hydrogen carrier import infrastructure could be deployed relatively quickly (except of course for first of a kind projects). This means that hydrogen carrier import terminals may not be the limiting step in developing international hydrogen shipping; they could be deployed once there are importing agreements with other countries.

In the topic of hydrogen supply chain costs, we learned that due to the current maturity stage of international hydrogen shipping, many recent studies exist but it is difficult to compare them with one another. Cost comparisons require assumptions across the entire value chain: electrolyser CAPEX, conversion (export) plants, shipping, reconversion (import) plants, and last-mile delivery. Moreover, the costs of hydrogen will depend on the country of origin due to topics including renewable power (potential) production (in the case of green hydrogen),

carbon capture and storage infrastructure (in the case of blue hydrogen) and overall existing infrastructure for e.g. hydrogen transport (when the hydrogen is not produced at the export port).

A subject not often discussed (yet) when it comes to international hydrogen shipping, is the topic of Incoterms and divisions of responsibilities between sellers and buyers. We have learned from the LNG industry that there are two main Incoterms used i.e. FOB (Free on Board), and DAP/DES (Delivered At Place/Delivered Ex Ship). Choosing the correct Incoterms for international hydrogen supply can be critical to ensuring energy security. For example, a FOB contract means that the buyer of the hydrogen can choose the import country, the shipping company, the importing facilities, and the potential buyers, which could change if, for example, market conditions shift. Therefore, while DAP/DES contracts are less flexible for the buyer, they provide a physical guarantee of supply essential for national energy security.

Looking at the different governmental actions available, the main question is which action (or combination thereof) would be most effective towards accelerating the development of low-carbon hydrogen carrier import terminals.

One of the most critical things regarding hydrogen projects in general is the perceived risk by financiers. We discussed that the lack of off-take guarantees has made several hydrogen production projects unfeasible, which is, among other things, due to the premiums that financiers charge due to the high perceived project risk. High perceived risk drives up interest rates. This increased cost of capital results in an 'artificially inflated' Levelized Cost of Hydrogen (LCOH), irrespective of the underlying technology costs. Therefore, offering simple CAPEX or OPEX grants to cover the 'profitability gap' is inefficient; effectively, the government is merely subsidizing the high interest payments demanded by (potentially) sceptical banks. Direct offtake risk mitigation is likely a more effective tool. By de-risking the revenue stream, the cost of capital drops, leading to a structural and sustainable reduction in LCOH. Direct offtake risk mitigation can be done e.g. via increasing offtake obligations but also by having a demand aggregator that can guarantee offtake volumes for a longer period of time than the market is currently willing to do. Moreover, CAPEX support can be needed in demonstration projects to decrease the risks associated with first-of-a-kind projects. Such CAPEX support could then be paired with other actions on the demand side.

We discussed several governmental actions that decrease offtake risk, including state-backed guarantees, direct state involvement, demand creation, and public demand aggregators. All these types of actions have been proven in the past to provide effective mitigating strategies to kick-start energy commodity markets in other sectors including LNG and solar power. The main question is how to carry out fair governmental actions for the market i.e. ensuring that all market participants can have access to the potential benefits of these actions and can become, if they want, first movers in the import of hydrogen. Another fair question to ask is how to make sure that the government receives benefits that are on par with any potential risk that it would take if it engaged in offtake risk mitigation.

The type of terminals (captive, merchant, or tolling) also plays a role in the type of suitable governmental actions. Since the goal of this work is to study import terminals that import hydrogen and add it to the Dutch economy, from a regulatory perspective captive terminals are not expected to exist in the Netherlands. Note that this does not exclude the possibility of developing captive terminals that do not convert back to hydrogen and are seen strictly as an industrial activity; such terminals were not part of the scope of this study.

Merchant terminals (that own the molecule and sell it) would need to bear the risk of overseas hydrogen (carrier) production, so for them having either a coordinated effort of state actors to accelerate and derisk overseas hydrogen production, may prove valuable. Tolling terminals (that only provide a service to importers) could be a less risky endeavour, but they would face a risk of not having sufficient offtake of their services. In this sense, tolling terminals may benefit from actions directed at supporting other actors in the supply chain. There is also a potential positive effect of developing infrastructure: for example, the mere existence of an import terminal that has defined operational costs and contract conditions, may entice other actors to invest in other parts of the hydrogen import value chain and use the services of the terminal. As such, giving e.g. a state-backed guarantee to an import terminal may be an interesting option.

Analysis of the international LNG industry demonstrates that governmental intervention is essential, rather than optional (depending on the policy goals), to accelerate the development of international supply chains for energy commodities. A few examples have been provided in this report where historically, state backing has been critical for catalysing complex, infrastructure-heavy industries and mitigating supply chain constraints during unforeseen crises, as evidenced for example by the state guarantees given for the EemsEnergyTerminal as a response to the 2022 energy crisis. While private enterprise may suffice for upstream production, the development of import infrastructure and international trade has rarely occurred without public support, especially at early stages. Consequently, the establishment of a secure, globalized hydrogen supply chain is likely to require governmental action, as the associated capital risks and strategic necessities frequently exceed the risk appetite of the private sector.

8 Conclusions

The goal of this research was to provide an answer to the following research questions:

What are the costs of hydrogen from ammonia cracking, dehydrogenated LOHCs, or regasified LH_2? What is the total cost of imported hydrogen, and how does it compare with the cost of domestic production?

We found an overall LCOH for the three carriers to be around **€ 4-11/kg H_2 for LH_2**, **€ 3-9/kg H_2 for NH_3**, and **€ 5-11/kg H_2 for LOHC**. These costs were found by carrying out a wide literature survey conducted on various publicly available studies of the past few years. Approximately half of the LCOH is related to the hydrogen production abroad, although a heavy dependence was found on the country of origin of the hydrogen as well as the assumed costs of assets in the international supply chains; these factors contributed to a high variability in the hydrogen production costs. The import costs represented around 10-20% of the total LCOH in the studies surveyed. The **domestic (Netherlands) hydrogen production** costs showcased in a recent TNO report was found at around **€ 9-16/kg H_2**. While the domestic costs appear to be considerably higher, it is important to note that, unlike the surveyed literature regarding international supply chains where their insights and cost assumptions may have been based on optimistic scenarios, the domestic costs were based on a market survey from realised or close-to-realisation projects. As such, we believe that the domestic production LCOH estimates can be more realistic than the imported LCOH values from literature.

The analysis has been done based on a wide survey of publicly available literature and no LCOH calculations were carried out explicitly for this study. Companies developing import terminals in the Netherlands have been consulted on the findings but little feedback was received regarding the LCOH data presented here. Note that this study does not aim to identify a winner in terms of best carrier to import but provide insights in the LCOH to identify where in the import chain government intervention is possible. Where deviations occur, they can be explained by differences in assumptions, country of origin of the hydrogen, costs of exporting and shipping, as well as design, technology maturity, and the specific operational choices required for commercial-scale deployment. Some companies also stated that these costs don't include expected inflation given the geopolitical tensions and conflicts at this moment in the world.

How does the CAPEX of import terminals (including conversion facilities) of different hydrogen carriers (e.g. NH_3, LOHC, LH_2) compare with each other?

In this study we defined a theoretical reference hydrogen carrier import terminal consisting of 6,000-ton H_2 storage and 200,000-ton H_2/year reconversion capacity. Moreover, data published by IRENA and the IEA was used for comparison of the different sources as well as different time references (2030 for IEA and 2040 for IRENA). A total import terminal CAPEX was found for **LH_2** between **€ 160M and € 570M**; for **NH_3** between **€ 298M and € 680M**, and for **LOHC** between **€ 370M and € 800M** for the reference import terminal size. The wide differences in CAPEX can be explained by differences in the cost sources as well as the different time horizons for e.g. cost-down as well as reflecting the current state of commercial maturity of the different processes including large-scale LH_2 storage and NH_3 and LOHC

reconversion. Consultation with industry led to broad insights regarding costs, where there was an overall agreement on the division between the storage and reconversion costs among all three hydrogen carriers studied, as well as an indication that the IEA costs were broadly more in agreement with present-day import terminal cost calculations carried out by them.

What are the expected revenue models for low-carbon hydrogen import terminals?

In this work we discussed the prospective revenue models of low-carbon hydrogen carrier import terminals. For this analysis, the current revenue models of LNG import terminals were examined to understand how hydrogen import revenue models could look like in the future. In the case of LNG import terminals, they can be classified in three general types: captive, merchant, and tolling terminals. Captive terminals are not open to the public but are classified as industrial activities. Merchant terminals import a commodity and sell it to the market; tolling terminals charge a fee for the import services, often as a “take-or-pay” model where import capacity is reserved by a third party. Of the three revenue models, it is expected that the tolling model is the only revenue model allowed in the current EU regulations, considering that hydrogen import infrastructure will be classified as critical infrastructure. This means that hydrogen carrier import terminals would have to allow Third Party Access (TPA) and charge a ‘tolling’ services fee based either on negotiated or regulated tariffs. Next to the usual structures e.g. of providing tolling services, other potential revenue streams for hydrogen import terminals could emerge, including providing grid balancing services to a hydrogen network or valorising the cold energy from imported carriers (mainly in LH_2 and NH_3) or the hot energy from the reconversion of carriers (NH_3 and LOHC).

Are there any market or transition-related failures or inefficacies and if so, what are the potential governmental actions that can be necessary in order to accelerate the development of low-carbon hydrogen import terminals in the Netherlands?

We discussed several current market and transition inefficacies and provided suggestions. We identified that, since import terminals only contribute 10-20% of the total LCOH, that CAPEX or price differential subsidies to import terminals may not be the most effective to accelerate low-carbon hydrogen imports. We discussed that offtake risk is one of the main risks for import terminals, which can lead to low bankability of projects and financiers charging a high premium for loans on debt-based import terminal projects. We also discussed that the potential lack of coordination of international supply chains (i.e. between exporters and importers) can lead to a ‘chicken-and-egg’ problem that can stall import projects.

This study presented potential options for governmental actions to accelerate the development of low-carbon hydrogen import terminals. For example, we discussed that providing state-backed guarantees for (a part of) the CAPEX of import terminals could lead to lowering the perceived risk by private financiers and thus lowering the interest rates for developing import terminal projects. Moreover, we also discussed that demand creation via increasing the value of green hydrogen (the so-called “multipliers”) can lead to an increase in perceived value of imported low-carbon hydrogen and therefore local demand. We also discussed direct state involvement of the government as a potential action, mainly to coordinate different actors in order to provide full support in international supply chain developments, which was inspired by the success of the “Japan Inc.” model in the early stages of the LNG market development. Finally, we also discussed the role of demand aggregators in accelerating off-take by either providing a single state-owned importer of the low-carbon hydrogen (inspired by the early KOGAS model for LNG in South Korea) or by providing an intermediary that organizes auctions and agreements between suppliers and off-takers while guaranteeing payments to suppliers (inspired by the SECI model) or directly

takes the ownership of the imported molecule and finds off-takers at a later stage (inspired by the H2Global model).

A. Appendix

Import facilities description

In this chapter, a technical description of low-carbon hydrogen carrier import terminals is given, using the existing layout of LNG import terminals as a starting point. Then the potential differences between the different hydrogen carriers (LH_2, NH_3, and LOHC) and LNG are discussed, followed by estimated reference costs of hydrogen carrier import terminals. After discussions with industry, LNG import terminals have been selected as the 'archetype' for (future) low-carbon hydrogen import terminals due to the similarity in layout between LNG and hydrogen import terminals, as well as the maturity of the current LNG market worldwide including numerous import terminals currently operating.

LNG import terminals

LNG (Liquefied Natural Gas) is one of the most common energy commodities that is currently shipped overseas. Due to the fact that a "reconversion" step (i.e. regasification) is usually needed at the import side, we are using LNG import facilities as a benchmark for the low-carbon hydrogen carriers. **Figure A-1** shows an overview of a typical LNG import terminal.

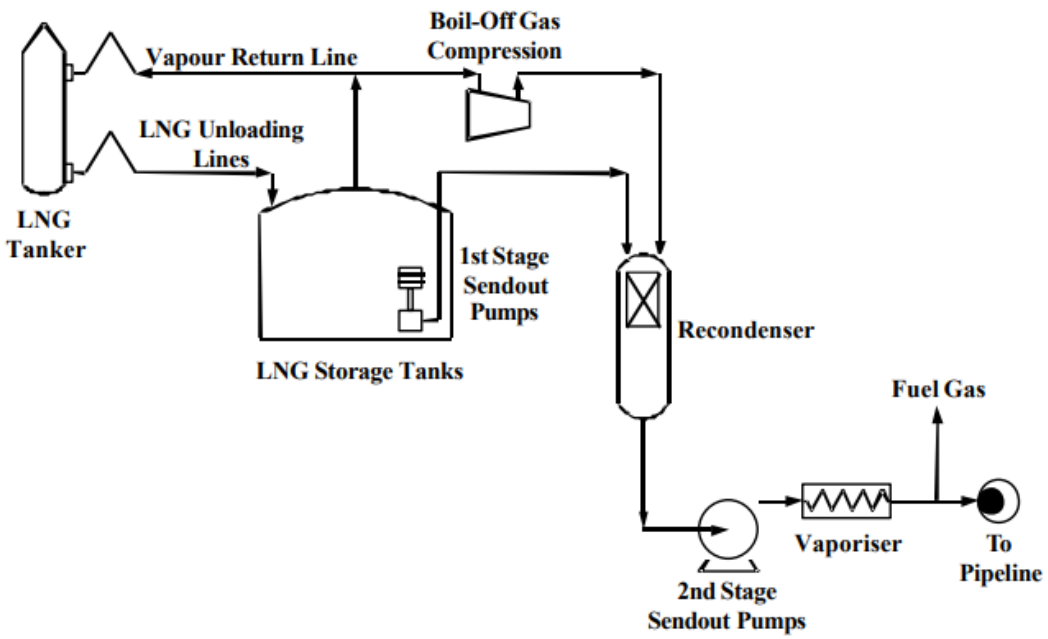

Figure A-1. Overview of a typical LNG import terminal[64].

A typical LNG import terminal contains the following main components:

[64] Tarlowski et al. LNG import terminals – Recent developments. https://www.cheresources.com/lng_terminals.pdf

1. **Unloading system**. The unloading system usually consists of a berth (the parking spot of an LNG tanker during unloading), a jetty (the physical structure that connects the berth with the terminal) and a loading arm (where the flow connection is made between the LNG tanker and the import terminal).

2. **Storage tanks**. They receive the LNG and store it as liquid at -162°C.

3. **Boil-off gas management**. Due to heat leakage, some evaporation of LNG will occur during storage. Some of this boil-off gas (BOG) is used to discharge the LNG tanker by displacement, i.e. the BOG is sent back to the LNG tanks in the tanker to fill the space left by the liquid as it flows from the tanker to the terminal. This is called a “vapour return line”. Note that not all import terminals may require a vapour return line because some LNG tankers would be able to generate enough vapour by themselves (e.g. by allowing some BOG on the tanks on board).

4. **Recondenser**. Here some of the BOG is mixed with the LNG in order to recondense it via mixing instead of liquefaction (due to lower energy consumption of mixing with respect to liquefying).

5. **Sendout pumps**. They increase the pressure of the LNG before it is vaporised, e.g. to inject it to a local pipeline system.

6. **Vaporisers**. They are used to regasify the LNG, i.e. evaporate it, before injecting the natural gas into a local pipeline system. There are three distinct kinds of vaporisers: ORV (open rack vaporisers) that use seawater as a ‘heating’ medium to regasify the LNG, SCV (Submerged Combustion Vaporisers) that use part of the LNG as fuel, and vaporisers that can recover the ‘cold energy’ from LNG and use it for other (industrial) processes.

7. **Safety and other process components**. These include the so-called “flare stack”, but also piping, control systems, safety systems, etc.

There are two basic types of LNG import terminals: onshore and floating terminals. Onshore terminals are typically built onshore in coastal areas, where all the components of the LNG terminal are located on land. Floating terminals, also known as FSRUs (Floating Storage and Regasification Units) are built on board of floating structures (e.g. ships) and contain both the storage and the regasification components. FSRUs are connected to land using a jetty. There are also “split” LNG terminals that combine offshore storage (e.g. using an FSU, Floating Storage Unit) with onshore “regas” (regasification), as well as offshore LNG terminals built on gravity-based structures (GBS), which are selected in places where the ocean conditions make it difficult to build a jetty for an FSRU. **Figure A-2** shows examples of the different forms of LNG import terminals.

The main design parameters of an LNG terminal are the **storage** capacity (e.g. in liquid m^3), and the nominal **send-out rate capacity** (i.e. the injection rate of the natural gas into a pipeline). There are other key parameters, including the **unloading rate** (rate of unloading of a tanker).

Figure A-2. Overview of the different types of LNG import terminals. (Top left) GATE Terminal in Rotterdam (onshore). (Top right) EemsEnergyTerminal (FSRU). (Bottom left) Delimara Terminal in Malta (FSU + onshore regas). (Bottom right) Adriatic LNG Terminal in Venice (GBS).

LH_2, NH_3, and LOHC import terminals

In this study we are considering three main forms of low-carbon hydrogen carrier import terminals:

1. **LH_2** (liquid hydrogen) import terminals, where LH_2 is regasified to produce gaseous hydrogen.
2. **NH_3** (ammonia) import terminals, where NH_3 is "cracked" to produce gaseous hydrogen (note that direct ammonia use is not considered in this study).
3. **LOHC** (liquid organic hydrogen carrier) import terminals, where LOHCs are dehydrogenated to produce gaseous hydrogen. Although there are different forms of LOHC (Toluene, Benzyl Toluene, and Dibenzyl Toluene), we are not differentiating across the particular layouts of each LOHC type, thus treating them as a single type of terminal

In principle, the layout of the LH_2, NH_3, and LOHC import terminals is quite similar to the layout of LNG terminals, i.e. all terminals require unloading of tankers, receiving storage, hydrogen reconversion, and send-out of hydrogen. There are particular differences across the different import terminals, related mainly to 1) the conditions of the stored molecule, and 2) the type of hydrogen reconversion process. **Table A-1** shows an overview of the differences across all three types of hydrogen carriers (LH_2, NH_3, and LOHC) and the differences between them and LNG terminals.

Table A-1. Overview of the key differences between imported energy carriers: LNG, LH_2, NH_3, and LOHC.

Imported energy commodity	LNG	LH_2	NH_3	LOHC
Theoretical volumetric hydrogen content [kgH_2/m^3 carrier]	Not applicable	70,9	120,3	47,1
Temperature at storage conditions	-162°C	-253°C	-33°C	Ambient
Type of storage required	Cryogenic tanks (e.g. full containment)	Cryogenic tanks (e.g. vacuum jacketed)	Refrigerated tanks (full or double containment)	Ambient tanks (e.g. floating roof tanks)
Type of hydrogen reconversion process	Physical	Physical	Chemical	Chemical
Type of required reconversion unit	Vaporiser	Vaporiser	Cracking + hydrogen purification plant	Dehydrogenation + hydrogen purification plant
Energy consumption of the reconversion unit [kWh/kg LNG or H_2]	<0,5 (mostly electric energy)	<1,0 (mostly electric energy)	4,2-7,0 (primarily thermal energy)	8,0-11,0 (primarily thermal energy)
Carbon footprint of the reconversion unit	Minimal	Minimal	Depends on the source of the energy input	Depends on the source of the energy input
BOG management requirements	Important	Significant	Low	Not required
BOG management forms	Recondensing + recompression	Recondensing + recompression	Refrigeration + reliquefaction	Not applicable
Number of liquid storage tanks required	Only for incoming liquid	Only for incoming liquid	Only for incoming liquid	Tanks for LOHC+ (hydrogen-rich liquid) and tanks for LOHC- (hydrogen-poor liquid)
Logistics	One-way (tanker leaves empty)	One-way (tanker leaves empty)	One-way (tanker leaves empty)	Two-way (tanker is loaded with the LOHC- molecule)
Key safety considerations	Fire / Explosion	Fire / Explosion / oxygen condensation	Toxicity / corrosiveness	Fire

Examples	**GATE terminal (NL)** **Storage capacity**: 540.000 liquid m^3 **Reconversion capacity**: 9.9 MTPA (million tons per annum)[65]	**Storage**: NASA Kennedy Space Center Pad 39B (US). 7.950 liquid m^3[66] **Reconversion**: Kobe Airport Island LH_2 import facility (JP)[67]	**Storage**: OCI ammonia import terminal (NL). 30.000-ton NH_3 storage[68], 400.000-ton NH_3/year send-out capacity[69] **Reconversion**: Topsoe's ammonia cracking at Planta Industrial de Agua Pesada (PIAP) 1 & 2 (AR): 2 x 2.400-ton NH_3/day[70]	**Storage**: Chempark Dormhagen (DE). Capacity: 1.800-ton storage (BT). In construction (exp. 2027)[71] **Reconversion**: Keihin refinery, as part of the AHEAD demonstration project (JP). 210 ton H_2/year (TOL)[72]

[65] GIIGNL (2025). GIIGNL Annual Report 2025. https://cdn.prod.website-files.com/67bdb9fc993751711c5f54fd/685278fda1e68e3b4324e2cf_0432365c1c5b8fb129ae8055cca8cb9b_%23GIIGNL%20-%20Livre%202025-20250610-Simple.pdf

[66] NTRS. World's Largest Liquid Hydrogen Tank Nearing Completion. Accessed on 04-12-2025. https://ntrs.nasa.gov/citations/20220004276

[67] HySTRA. Hydrogen Energy Supply Chain Pilot Project between Australia and Japan. Accessed on 04-12-2025. https://www.hystra.or.jp/en/project/#:~:text=The%20pilot%20project%20site%20is,Project

[68] VICTROL. Press Release: OCI Global and VICTROL partner to Develop Refrigerated Clean Ammonia Bunkering Supply Chain in the Netherlands and Belgium. Accessed on 04-12-2025. https://www.victrol.be/news/press-release-oci-global-victrol/#:~:text=With%20permits%20in%20place%20to,and%20storage%20of%20clean%20ammonia.

[69] Ammonia Energy Association. OCI to expand ammonia import capabilities at Rotterdam. Accessed on 04-12-2025. https://ammoniaenergy.org/articles/oci-to-expand-ammonia-import-capabilities-at-rotterdam/

[70] Brito, Paulo. H_2Retake. Ammonia Cracking – TOPSOE's innovative technology. Building on industrial experience. Presentation at the Ammonia Energy Association (AEA) Annual Conference 2024. https://ammoniaenergy.org/wp-content/uploads/2024/11/P-Brito-2024.pdf.

[71] H_2 International. Hydrogenious receives permit for LOHC hydrogen storage system "Hector". Accessed on 04-12-2025. https://www.H_2-international.com/storage/projects-hydrogenious-receives-permit-lohc-hydrogen-storage-system-hector#:~:text=The%20Cologne%20District%20Government%20granted,capacity%20of%20approximately%201%2C800%20tonnes.

[72] Chiyoda Corporation. The World's First Global Hydrogen Supply Chain Demonstration Project. Accessed 04-12-2025. https://www.chiyodacorp.com/en/service/lowcarbon/hydrogen/demonstration/

Import terminal ownership structures

There are, generally speaking, three main ownership structures of LNG import terminals:

- **Full ownership**. A party builds and operates an LNG import terminal.
- **TCP (Time Charter Party).** A party builds a floating structure (e.g., a regasification unit, a storage tank farm, or both) and leases them to the operator.
- **BOOT (Build-Own-Operate-Transfer)**. A party builds and operates an LNG terminal for a dedicated amount of time, during which time it receives a payment from another party. After a certain time, the current owner of the LNG terminal transfers ownership to the party from which it has been receiving payments.

Due partially to the large up-front capital investment of fully onshore LNG import terminals, and the speed of developing floating units e.g. FSRUs but also FSUs (storage only) or FRUs (regasification only), floating structures have become increasingly popular as part of LNG import terminals. Based on information from the GIIGNL Annual Report 2025[73], we estimate that floating-based import terminals represent ~24% of all the LNG import terminal base. Furthermore, floating-based terminals are increasing in popularity since 2009, and in 2023 and 2024 they represented ~50% of the newly commissioned LNG import terminals. **Figure 8-1** shows the division between onshore and floating terminals.

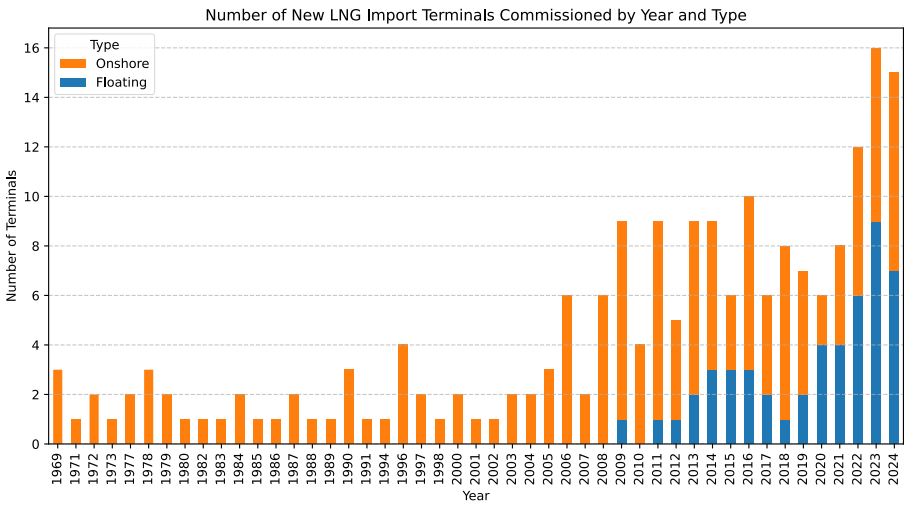

Figure 8-1. Number of LNG import terminals by commissioning year and type (onshore and floating). Own estimations using data from the GIIGNL Annual Report 2025.

Some floating-based import terminals have a different economic model than fully owned terminals. Instead of the terminal owner fully owning the infrastructure, the terminal owner enters into a Time Charter Party (TCP) agreement with the infrastructure owner[74]. In such

[73] Based on data from GIIGNL (2025). These numbers came from manually counting the import terminals listed on pages 52-62, where small errors could have been made including the distinction between an individual terminal and an expansion of an existing terminal, which the GIIGNL Annual Report counts as two (or more) separate entries.
[74] See e.g. MOL (Mitsui O.S.K. Lines). MOL and Gaz System enter into agreement on FSRU project in Gdańsk, Poland - Contribute to the Energy Security of Poland from 2027-2028 -. Accessed on 08-12-2025. https://www.mol.co.jp/en/pr/2024/24060.html

agreement, the LNG import terminal operator pays a “charter rate” for the leasing of the infrastructure. The TCP leasing model seems to be more popular for floating-based infrastructure, than for onshore infrastructure.

One of the main disadvantages of TCP agreements is the higher annual leasing costs compared to the payback costs (asset depreciation) of a fully owned terminal. For example, due to the higher charter rates for FSRUs, it is estimated that onshore LNG import terminals can be cheaper than FSRUs after six to seven years of operation[75].

That being said, one of the main advantages of TCP leasing models with respect to full ownership, is the shorter commissioning time. According to the 2024 IGU World LNG report, FSRUs can be deployed in a matter of months, they offer greater flexibility and require lower fixed investment and can help new markets meet demand in the short term. Moreover, six out of the seven LNG import projects commissioned in Europe in 2023, six were FSRU-based[76]. Furthermore, the EemsEnergyTerminal mentions that the terminal went from plan to completion in six months[77], thereby showcasing the shorter time to market (“time to first gas”) of FSRU-based import infrastructure with respect to onshore-based projects. For reference, the GATE Terminal started construction in 2008, and it was commissioned in 2011[78].

[75] IEEFA (Institute for Energy Economics and Financial Analysis). Floating LNG import terminals pose cost and climate challenges for Asian markets. Accessed on 08-12-2025. https://ieefa.org/resources/floating-lng-import-terminals-pose-cost-and-climate-challenges-asian-markets
[76] IGU (2024). 2024 World LNG report. https://maritimecyprus.com/wp-content/uploads/2024/06/IGU-2024-LNG-Report_c.pdf
[77] Gasunie. Project. EemsEnergyTerminal. Accessed on 08-12-2025. https://www.gasunie.nl/en/projects/eemsenergyterminal
[78] GEM (Global Energy Monitor). Gate LNG Terminal. Accessed on 08-12-2025. https://www.gem.wiki/Gate_LNG_Terminal

General overview of the Incoterms

Incoterms (International Commercial Terms) are a set of 11 individual rules (7 are applicable for any mode of transportation, and 4 are specific for sea and inland waterway transport) issued by the International Chamber of Commerce (ICC) which define the responsibilities of sellers and buyers for the sale of goods in international transactions. Each Incoterms rule clarifies the tasks, costs, and risks to be borne by buyers and sellers in these transactions[79]. Furthermore, Incoterms are often a manner of expressing costs for international sales of goods, whereby sellers clarify their responsibilities and the scope that the agreed sales price of any goods include and exclude.

Table A-2 shows the 11 Incoterms (as per 2020, often called Incoterms 2020), with an overview of the responsibilities of the seller and the buyer of the goods.

Table A-2. Overview of the Incoterms.

Incoterms 2020	Explanation	Where does the seller's responsibilities end?	Where does the buyer's responsibilities start?
General Incoterms			
EXW Ex Works	Price is defined at the production site	Produce the product and make it ready to be picked up at their premises	From arranging pickup of the goods from the seller's site
FCA Free Carrier	Seller delivers the goods, cleared for export, to the carrier nominated by the buyer	EXW + Clear the product for export and load to the carrier (transporter)	Nominate the carrier
CPT Carriage Paid To	Seller pays for the carriage to the named destination, but buyer is responsible for the goods on the carriage	FCA + Seller pays for the carriage but is not responsible for the goods	Buyer is responsible for the goods
CIP Carriage and Insurance Paid To	Seller arranges first carriage and insures the goods	CPT + Seller arranges insurance for the goods	Buyer is responsible for receiving the goods at the port of entry (import)
DAP Delivery at Place	Seller delivers to the buyer at its cost and risk, but buyer is responsible for import customs and duties	CIP + Seller is responsible for the goods up until buyer's location	Arranges import clearance, duties, etc.
DPU Delivered at Place Unloaded	Seller unloads goods at the buyer's place	DAP + Seller bears responsibilities to unload goods	Arranges import clearance but is not responsible for the goods until their location

[79] US Department of Commerce. International Trade Administration. Know your Incoterms. https://www.trade.gov/know-your-incoterms

DDP Delivered Duty Paid	Seller delivers goods cleared for import	DPU + Seller is responsible for unloaded goods	None
Shipping and Inland Waterway Transport			
FAS Free Alongside Ship	Seller places goods alongside the vessel nominated by the buyer, but does not load them	FCA but Seller does not load the goods on the vessel	Loads the goods on the vessel
FOB Free On Board	Seller loads goods on the vessel nominated by the buyer	FCA but Only applicable for shipping and inland waterway transport	Arranges shipping
CFR Cost and Freight	Seller pays for cost and freight to the port of destination, but the risk on board of the vessel is transferred to the buyer	CPT but Only applicable for shipping and inland waterway transport	Arranges insurance on board of the vessel
CIF Cost, Insurance, and Freight	Seller pays for cost and freight to the port of destination and buys insurance, but the risk on board of the vessel is transferred to the buyer	CFR + Seller buys insurance	Buyer is responsible for the goods on board of the vessel

Overview of current revenue models of LNG import terminals

Transfer pricing

This refers to the method for accounting of revenue in a captive LNG import terminal owned by a private party. In order to ensure transparency and fairness of the services and added value provided by an LNG terminal, the OECD describes guidelines in order to set a 'fair price' for the services of an LNG import terminal, considering for example a so-called "cost plus method" that considers the costs incurred in the operation plus a mark-up corresponding to an appropriate profit. In this way, a tax authority can have a fair overview of the profits incurred by the particular operations of an LNG terminal instead of having an uncontrolled revenue stream where the owner of a captive LNG terminal may associate fiscal losses of other parts of their operation, to the LNG terminal[80].

Allowed revenue

This method is used when a captive LNG terminal is operated by a regulated party e.g. a state-owned gas entity. In such a model, a regulator in a country determines the entity's invested capital in all its operations (including an LNG import facility), which becomes the RAB (Regulatory Asset Base)[81][82]. Then the corresponding regulator sets a regulated return (typically as a % of the RAB), which then is used by the regulated party into the cost they charge to consumers to account for the allowed revenue and also considering e.g. OPEX and asset depreciation.

Price arbitrage

This concept refers to the profit generated by an operator of a private merchant terminal (either integrated services or bundled services), where the goal is to carry out transactions that maximise their net profit i.e. increasing revenue from the sold gas, decreasing the cost from the purchased gas or the LNG import terminal operations, or a combination of both[83].

In the case of regulated entities, this will depend on the particular market. In the case of the EU, due to the unbundling of the energy supply chain, the EU forbids regulated entities from doing both gas provision and infrastructure ownership in the case of TSOs (Transmission System Operators). This means that it is less likely to find regulated entities in the EU that operate merchant terminals.

[80] OECD (2022). Transfer Pricing Guidelines for Multinational Enterprises and Tax Administrations. https://www.oecd.org/content/dam/oecd/en/publications/reports/2022/01/oecd-transfer-pricing-guidelines-for-multinational-enterprises-and-tax-administrations-2022_57104b3a/0e655865-en.pdf

[81] Richiest.com. Understanding the Regulatory Asset Base: Definition, Function, and Case Study. Accessed on 02-12-2025. https://richiest.com/articles/regulatory-asset-base.html

[82] Oxera (2011). The opening regulatory asset base of the Dutch gas transmission system. https://www.acm.nl/sites/default/files/old_publication/bijlagen/4229_Regulatory%20Asset%20Base.pdf

[83] Oxford Institute for Energy Studies. The Nature of LNG Arbitrage: an Analysis of the Main Barriers tot he Growth of the Global LNG Arbitrage Market. https://www.oxfordenergy.org/wpcms/wp-content/uploads/2010/11/NG31-TheNatureofLNGArbitrageAndAnAnalysisoftheMainBarriersfortheGrowthofGlobalLNGArbitrageMarket-PolinaZhuravleva-2009.pdf

Tolling fees

In the case of unbundled LNG import terminals, such as the terminals operated by Enagás in Spain, the revenue model of the LNG import terminals is based on charging a client for different fees for the use of the LNG import terminal, including[84]:

a) Unloading fee of LNG tankers
b) LNG storage fee
c) Regasification fee
d) LNG Truck loading fee
e) Virtual liquefaction fee
f) LNG vessel loading fee
g) Transshipment fee ship to ship (STS)
h) Cool-down fee

Note that some of these fees are split in two main categories: capacity reservation e.g. EUR/(kWh/day)/year and variable fee e.g. EUR/kWh. **Table 8-1** shows an overview of which fees have a capacity reservation and a variable fee, and which do not.

Table 8-1. Overview of the types of fees in the Enagás LNG import terminals, and which types of fees each one has.

Type of tolling fee	Capacity reservation fee [EUR/(kWh/day)/year]	Variable fee [EUR/kWh]
Unloading fee of LNG tankers	No	Yes (there is both a variable fee and fee depending on the size of the tanker in EUR/tanker)
LNG storage fee	Yes	Yes
Regasification fee	Yes	Yes
LNG Truck loading fee	Yes	Yes
Virtual liquefaction fee	Yes	No
LNG vessel loading fee	No	Yes
Transshipment fee ship to ship (STS)	No	Yes
Cold storage fee	No	Yes

Additionally, there are multipliers of the fees depending on the duration of the contract i.e. if the contract between Enagás (as the LNG import terminal operator) and a client, is shorter than one year, there are different multipliers for some of the fees (mainly LNG storage, regasification, LNG Truck loading, and virtual liquefaction), depending on the duration of a contract (e.g. trimestral, monthly, daily, or intraday contracts).

[84] Agencia Estatal (State Agency). Boletín Oficial del Estado (Official State Bulletin). Resolución de 23 de mayo de 2024, de la Comisión Nacional de los Mercados y la Competencia, por la que se establecen los peajes de acceso a las redes de transporte, redes locales y regasificación para el año de gas 2025. https://www.boe.es/eli/es/res/2024/05/23/(2)

Overview of governmental actions

Typically, the types of governmental actions can be classified in the following categories:

- Financial derisking actions
- Demand creating actions
- Risk-sharing governmental actions
- Regulatory and permitting actions
- Diplomatic actions

Financial derisking governmental actions

The financial derisking governmental actions can be classified in three general groups:

CAPEX support. This refers to actions or policies intended to subsidize (part of) the investment cost of an import terminal e.g. a % of the total plant CAPEX. An example is the Dutch OWE subsidy that gives CAPEX subsidies for electrolyser installations to be built in the Netherlands[85].

OPEX support. This refers to actions or policies intended to subsidize (part of) the OPEX or the final cost of the energy carrier. This can be done either as a fixed amount or as a CFD (Contract for Difference), where the level of OPEX support will depend on the difference between the market price and the production price of a commodity. An example is the European Hydrogen Bank that offers EUR/kgH_2 subsidies to hydrogen production projects in the EU[86].

Fiscal support. This kind of support is given to producers or consumers of commodities in order to stimulate the market. Although not directly, fiscal support is often related to the "unprofitable gap" i.e. the difference between market prices and willingness to pay of a particular sector about a particular commodity. An example of this is the Clean Hydrogen Production Tax Credits (45V) by the US Department of Energy, which offered credits to companies that produced clean hydrogen for up to 10 years[87].

Demand creating governmental actions

Governmental actions that create demand can be, for example:

Mandatory production targets. A producer of fuels or other commodities can be mandated to incorporate e.g. a % of products from a particular origin (including low-carbon, RFNBO, biological origin, etc.) or with a particular characteristic (e.g. lower CO2 emissions) in the products they supply to a customer. An example are the CO2 emission performance standards, an EU regulation aimed at decreasing the average emissions of new vehicles that sold in the EU. In this case, the car manufacturer pays a penalty (a Carbon Intensity Penalty)

[85] Business.gov.nl. Subsidy for hydrogen production by electrolysis (OWE). Accessed on 04-12-2025. https://business.gov.nl/subsidy/subsidy-scheme-hydrogen-production-via-electrolysis-owe/
[86] European Commission. European Hydrogen Bank. Accessed on 04-12-2025. https://energy.ec.europa.eu/topics/eus-energy-system/hydrogen/european-hydrogen-bank_en
[87] US Department of Energy. Clean Hydrogen Production Tax Credit (45V) Resources. Accessed on 04-12-2025. https://www.energy.gov/articles/clean-hydrogen-production-tax-credit-45v-resources

if the average emissions of the vehicles they sell is higher than a carbon emission intensity target[88].

Mandatory consumption targets. A consumer of fuels or commodities can be mandated to incorporate a certain % of their total consumption of fuels or commodities, in their operations. An example are the RED III targets that mandate e.g. the transport industry to consume a minimum % of their energy needs in the form of RFNBO[89].

Carbon pricing. Market participants can be mandated to pay penalties related to emissions or participate in emissions trading markets. An example of this is the EU ETS (Emission Trading System), which introduced a “cap and trade” principle that sets limits to greenhouse gas emissions in particular industries, and allows for the trading of emissions allowances between regulated industries[90].

Market protection mechanisms. These actions are aimed at mitigating the risk of unfair competition of commodities made with different regulations (often less strict in terms of e.g. emissions) in heavily regulated markets. An example of this is the Carbon Border Adjustment Mechanism (CBAM), which aims at adjusting the cost of an imported good to the EU based on its carbon intensity with respect to the allowed intensity in a regulated market[91].

Risk-sharing governmental actions

Next to financial derisking and demand creating governmental actions, there are also governmental actions that can be developed towards sharing project or investment risks across private and public entities. For example:

State-backed guarantees. These are government guarantees that are extended in order to guarantee the revenue of a project, in case there are no clients or off takers of a product or a service. An example is the Export Credit Agencies (ECA) such as Atradius in the Netherlands, which provide insurances and guarantees on behalf of the Dutch state to exporters and investors operating abroad, with a focus on developing countries[92].

Public demand aggregators. These are public or public-private entities that become the *de-facto* client of a company. The role of the demand aggregators is to incorporate several small-scale client contracts into one large contract in order to provide off-take certainty to a company or to create certainty regarding the flow of an energy carrier in a particular market. An example is the H_2Global initiative, a public-private entity that seeks to become an aggregator of low-carbon hydrogen supply from outside the EU and sell it in the EU market[93].

Public procurement. In this case, the government creates a "lead market" by acting as a direct customer for low-carbon energy or technologies. By issuing tenders that specifically require certain attributes (e.g. purchasing low-carbon commodities), the public sector

[88] Official Journal of the European Union. Regulation (EU) 2019/631 Of The European Parliament And Of The Council of 17 April 2019, setting CO2 emission performance standards for new passenger cars and for new light commercial vehicles, and repealing Regulations (EC) No 443/2009 and (EU) No 510/2011. https://eur-lex.europa.eu/legal-content/EN/TXT/?uri=CELEX%3A02019R0631-20250709
[89] TNO (2024). Renewable fuels up to 2030 – Assessment of RED III. Report number TNO 2024 R10617. https://www.pbl.nl/system/files/document/2024-05/tno-2024-renewable-fuels-up-to-2030-assessment-of-redIII.pdf
[90] EU Climate Action. EU Emissions Trading System (EU ETS). Accessed on 04-12-2025. https://climate.ec.europa.eu/eu-action/carbon-markets/eu-emissions-trading-system-eu-ets_en
[91] AGI Global Logistics. CBAM Explained. Accessed on 04-12-2025. https://www.agi.global/custom-clearance-hub/cbam-explained-a-practical-guide-to-the-eus-carbon-border-adjustment-mechanism
[92] Both ENDS. The Dutch Export Credit Agency. Accessed on 04-12-2025. https://annualreport.bothends.org/ecas/
[93] See H_2Global (2024).

guarantees early demand, reducing market risk for suppliers. An example is the US General Services Administration (GSA), the US's largest energy consumer, which directly purchases (clean) energy for more than 300.000 buildings and 600.000 vehicles[94].

Regulatory and permitting governmental actions

Regulatory and permitting actions aim at providing certainty to a market, either regarding construction and operating licenses, or to standardise definitions of e.g. commodities. For example:

Streamlining permitting procedures. For first-of-a-kind projects (such as low-carbon hydrogen carrier import terminals), it is not always clear for either party (developers or permitting agencies) what is the required documentation, what are the hazards of a particular process (thus the safety distances), etc. Streamlining permitting procedures implies establishing either clear rules or fast-track options for types of projects considered prioritary. An example is the amendment of the German Building Code and the new Wind Energy Area Requirements Act, which aimed at making it much easier to obtain planning permission for wind turbines[95].

Certification and standardisation. These kinds of governmental policies aim at providing a common legal definition for key commodities, in order to standardise the product offering from different suppliers. An example of this is the Delegated Acts of Articles 27.3 and 28.5 of the RED II, which provide the definition of RFNBOs as well as a basis for calculating the carbon intensity of low-carbon fuels[96].

Diplomatic governmental actions

Diplomatic actions are aimed at creating or strengthening relationships with key countries or locations, with the aim of increasing the likelihood of bi- or multilateral agreements. For example:

Memoranda of Understanding (MoUs). These are documents that are signed either between governments or between companies from different countries, which signal the intention to collaborate in a particular sector or as part of a supply chain. An example is the MoU between the Netherlands and the Kingdom of Morocco regarding cooperation in the field of renewable energy[97].

[94] US GSA. General Services Administration and Department of Defense seek record-setting federal purchases of clean electricity. Accessed on 04-12-2025. https://www.gsa.gov/about-us/newsroom/news-releases/general-services-administration-and-department-of-defense-seek-recordsetting-federal-purchases-of-clean-electricity-07152024#:~:text=With%20more%20than%20300%2C000%20buildings,energy%20efficient%20buildings%2C%20and%20CFE.

[95] Deloitte Legal. Building law: New regulatory mechanism for onshore wind energy. Accessed on 04-12-2025. https://www.deloittelegal.de/dl/en/services/legal/perspectives/baurecht-neuer-regelungsmechanismus-windenergie.html

[96] Official Journal of the European Union (2023). Commission Delegated Regulation (EU) 2023/1184 and 2023/1185. https://eur-lex.europa.eu/legal-content/EN/TXT/?uri=CELEX:32023R1184 and https://eur-lex.europa.eu/legal-content/EN/TXT/?uri=CELEX:32023R1185

[97] Government.nl. MoU between the Netherlands and the Kingdom of Morocco regarding cooperation in the field of renewable energy. https://www.government.nl/binaries/government/documenten/diplomatic-statements/2023/06/21/memorandum-of-understanding-between-the-governments-of-morocco-and-the-netherlands-on-cooperation-in-the-field-of-hydrogen/NetherlandsMoroccoHydrogenMoU21June2023.pdf

Energy & Materials Transition

Kessler Park 1
2288GS Rijswijk
www.tno.nl

TNO innovation for life